KE-BURGMANN

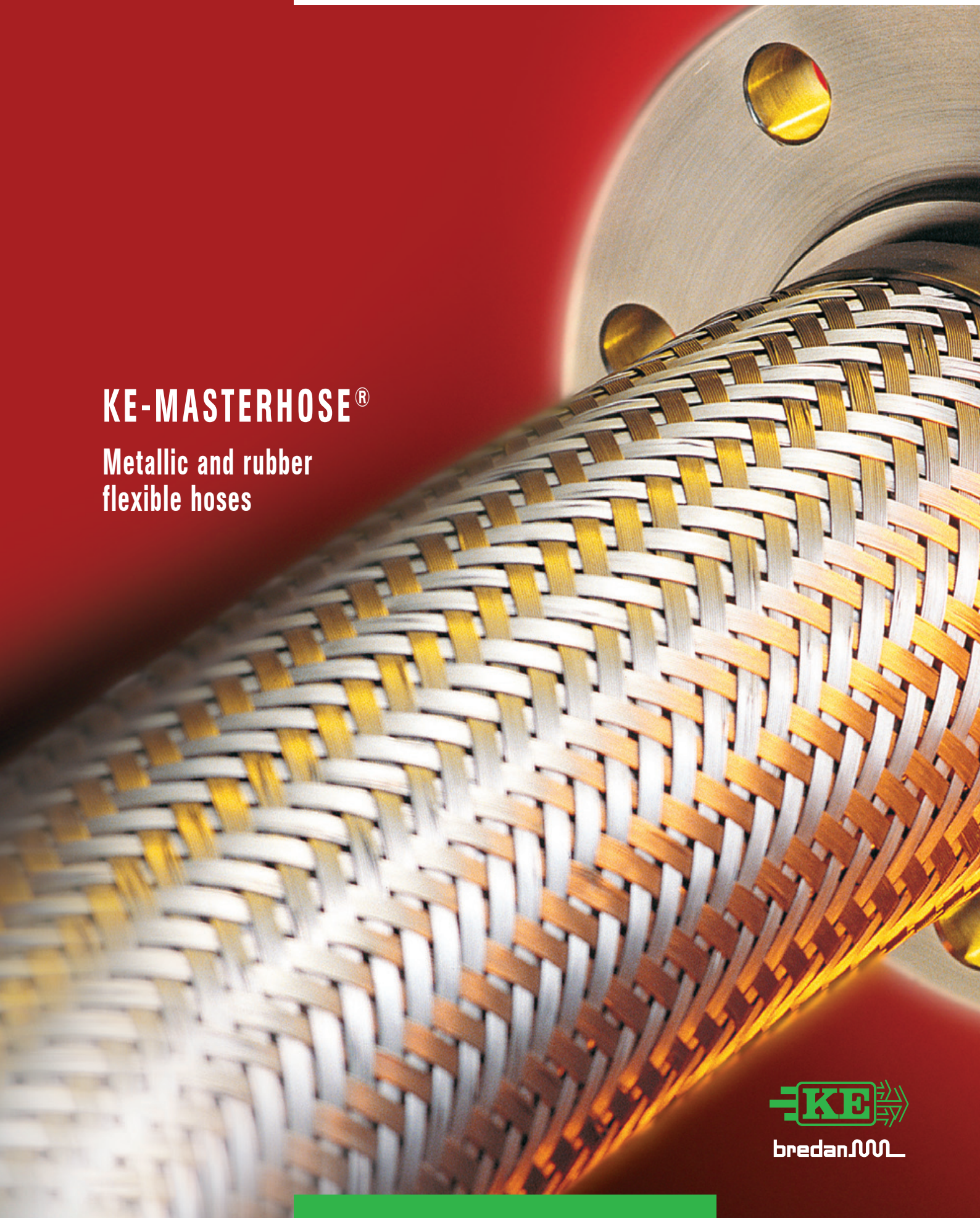

KE-MASTERHOSE®

Metallic and rubber flexible hoses

KE

bredan

Table of Contents

	Hose type	Page
Table of Contents		2-3
The KE-Masterhose range of flexible hoses		4
Flexible metal hoses		5
Flexible rubber hoses, hose end fittings		6
Construction of metal hoses		7
Selecting coupling material based on operating conditions		7
Reduction factors for various operating conditions		8
How to determine proper hose length for lateral offset movements		9
How to calculate hose length for horizontal, vertical and bending movements		10
Enquiry Data Sheet		11
KE-Masterhose® installation instructions		12-13
High-alloy single-wall hose, medium wall thickness, standard corrugation pitch	HS10	14
High-alloy single-wall hose, medium wall thickness, low corrugation depth	HL20	15
High-alloy single-wall hose, medium wall thickness, close corrugation pitch	HC30	16
High-alloy single-wall hose, large wall thickness, standard corrugation pitch	HT40/HT50	17
High-alloy double-wall hose, medium wall thickness, standard corrugation pitch	HZ60	18
High-alloy hose, high-pressure version	HH70	19
Fixed neck-pipe flange acc. to DIN 2501 (PN6 – PN40)	FF400	20
Socket with fixed flange acc. to EN-1092-1	FF405	21
Floating flange with a limited bush acc. to DIN 2501 (PN10 – PN40)	FS410	22
Tubular nozzle with ring collar and floating flange to DIN 2501	FS415	23
Floating flange with a limiting orifice acc. to DIN 2501 (ISO 7005-1)	FS420	23
Male nipple with a straight thread acc. to ISO 228	MN500	24
Male nipple with a taper thread acc. to DIN 2999	MN505	24
Cast-iron male nipple with taper thread acc. to DIN 2999	MN510	25

Table of Contents

	Hose type	Page
Standard muff with a taper thread acc. to DIN 2999, optional NPT thread	FM515	26
Cast-iron female muff with a taper thread acc. to DIN 2999	FM520	26
Stub pipe acc. to DIN 2353	SP200	27
Weld stub pipe	SP205	27
Male union with 24° conical sealing face and straight thread acc. to ISO 228	UC300	28
60° taper seal and sphere with male thread acc. to ISO 228-1	UC305	28
Female union with 24° conical sealing face and straight thread acc. to DIN 2999	UC310	29
60° taper seal and sphere with male thread acc. to ISO 1-1, on request NPT	UC315	29
Male union with 24° conical sealing face and ISO weld butt	UC320	30
60° taper seal and sphere with female thread acc. to ISO 7-1, on request NPT	UC325	30
Union with 24° conical sealing face and ISO welde butt	UC330	31
60° taper seal and sphere with ISO weldneck end	UC335	31
3 part cast-iron male union with 24° conical sealing face and taper thread acc. to DIN 2999	UC340	32
Cast-iron female union with 24° conical sealing face and taper thread acc. to DIN 2999	UC345	32
Female union with 24° conical sealing face and parallel thread acc. to DIN 2999	UC350	33
Cast-iron female union with flat sealing face and inner thread acc. to DIN 2999 (BSPT)	UC355	33
Union with 24° conical sealing face with O-ring acc. to DIN 3870-S	UC360	34
Union acc. to DIN 3870 - light version	UC365	34
Union with spherical sealing and metric thread acc. to DIN 3870LL	UC370	35
Socket with flat bearing area and cap nut acc. to DIN 3870LL	UC375	35
Union with spherical sealing and unified screw thread acc. to ISO 10806	UC380	36
Tapered socket with proved union nut to DIN 11851	UC385	36
Threaded socket with male thread to DIN 11851	UC390	37
Camlock acc. to DIN 2828 – quick coupler male part	CC400	38
Camlock acc. to DIN 2828 – quick coupler female part	CC405	38

a team with experience

The KE-Masterhose® range of flexible metal and rubber hoses and tubing are manufactured from corrugated, stainless steel, thin-walled welded pipes and from high-grade, strong rubber materials. They are designed for use in piping systems, where fluids, gases, chemicals etc. are being conveyed, often under pressure.

Flexible metal and rubber hoses and tubing serve to absorb reciprocating motion, thermal expansion, vibration and misalignment, which may otherwise cause damage to the piping system. Applications include, amongst others:

- Transportation of hazardous fluids
- Anti-vibration use
- Transportation of high pressure corrosive gas
- Loading & unloading of tanks & tankers

Stainless steel and rubber hoses and flexible tubing, which can be provided with stainless steel wire on the outside for protection and for higher pressure ratings, are used in the following industries:

- Refineries & petro-chemical
- Power plants & boilers
- Steel works
- Chemicals industry
- Paper industry
- Fertiliser industry
- Nuclear plants
- Lubrication systems
- Automotive exhaust systems
- Steam, hot water and pneumatic systems

Advantages of the KE-Masterhose® range:

- High physical strength combined with light weight
- Suitable for a wide temperature range (-200°C up to +700°C)
- Good corrosion resistance
- Resistance to fire, moisture, abrasion and penetration
- Absorb vibration and noise from pumps, compressors, engines etc
- Compensate for thermal expansion or contraction of piping
- Connect misaligned rigid piping
- A flexible and quick option for correct piping in difficult locations

KE-Masterhose

KE-Burgmann - a team with experience

KE-Burgmann has more than 40 years of experience in the production and application of expansion joints and flexible connections. During this time we have gained an in-depth knowledge of materials, advanced production technology, technical expertise concerning design, dimensions and calculations - with integrated software to support them - and last , but not least - a commitment to always giving our best and supplying the highest quality services from all levels of our organisation. With this commitment, we enter into a dialogue with our customer in which advice and co-operation are the keywords.

Flexible metal hoses

Hose
Stainless steel corrugated flexible hoses are available for 6mm to 300mm nominal bore. The annular corrugations provide a pressure tight flexible core. For more flexible and higher pressure applications, close pitch core and thick walled constructions are available.

Braid
When pressure is applied to a corrugated section, it tries to elongate axially. Obviously this is not acceptable so for higher pressures the hose core is fitted with an external wire braid or braids. For even higher pressure still, two or three braids can be fitted.

Temperature correction factor
When a hose is working at elevated temperatures, the working pressure given here should be multiplied by a correction factor to give the pressure rating at temperature.

Pressure loss
The pressure loss in a corrugated flexible hose is approximately 100% higher than in newly welded steel pipes. This means that an increase in diameter of 15% is required to reduce pressure loss to that of the pipe. Please consult our engineers to advise you on any pressure loss that may occur.

Working pressure

TEMP. (°C)	(°F)	CORR. FACTOR
–200 to +20	–392 to +68	1.0
50	122	0.95
100	212	0.83
150	302	0.75
200	392	0.69
250	482	0.65
300	572	0.61
350	662	0.58
400	752	0.56
450	842	0.54
500	932	0.53
550	1022	0.52
600	1112	0.34
650	1202	0.19
700	1292	0.10

Protection
Any signs of external damage to the braid should cause immediate replacement of the hose. If rubbing or abrasion is a recurring problem to the hose, then there are a number of options available such as steel helix covers, plastic covers or scuff rings.

Care should be taken to avoid the hose bending beyond the specified bend radius especially near the end fittings. If this occurs we can supply factory fitted bend limiters to each end to overcome this problem.

Flow velocity
High flow velocity causes vibration and resonance which can lead to early failure. For flow velocities above 50m/sec for gas and 25m/sec for liquids then an internal liner would be necessary. For hoses with 900 bends the value should be reduced by 50% and with 450 bends by 25%.

Shock pressure
When pulsating, surge or shock pressures occur, they have an effect on the life span of a hose assembly. The peak pressure must not exceed 50% of the maximum pressure.

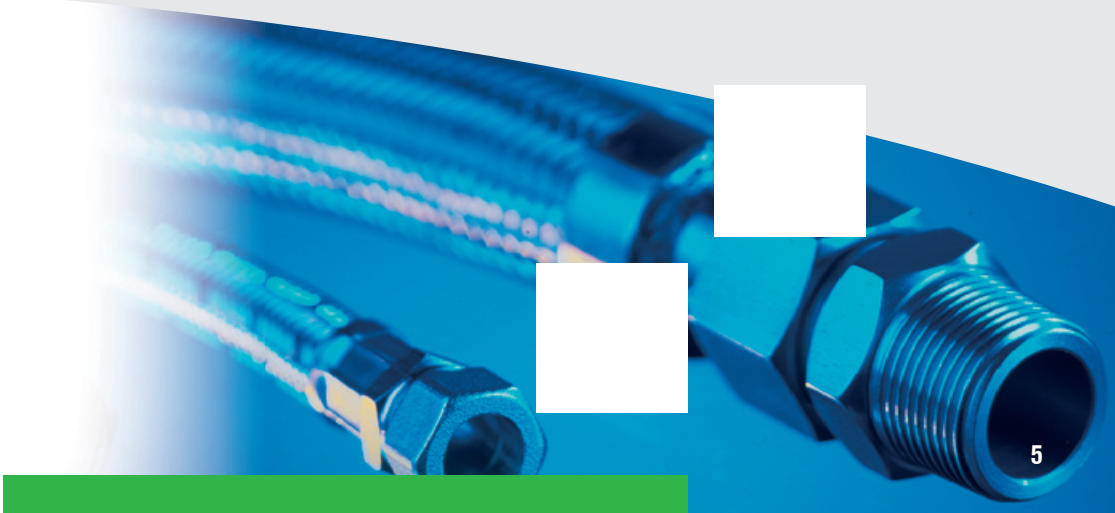

A guide to a general selection

Service	Type
Air	EPDM
Carbon dioxide	Nitrile
Nitrogen	EPDM, nitrile
Water (hot or cold)	EPDM, silicone

Standard construction

EPDM hose

St/stl braid

St/stl ferrules

Nickel plated brass end fittings

Working conditions

Operating temperature: –
-20° to 120°C

Max. operating pressure: 10 Bar

Burst pressure: >66 bar

Options

Rubber: Nitrile, Silicone

Overbraid: 304 st/stl

Ferrules: 304 st/stl

Nominal bore (mm): 6mm, 8mm 10mm, 12mm, 15mm, 19mm, 25mm

End fittings: BSPT male, BSPP male, standpipe, swivel female coneseat, swivel female flat face, compression fitting with nut and olive.

Flexible Rubber Hoses

The KE-Burgmann range of flexible rubber hoses are suitable for a very wide range of applications from laboratories, fan coil units (heat exchangers), pump connectors and domestic/industrial hot or cold water systems.

The hose assemblies consist of flexible rubber tubing with single external stainless steel wire braid, terminating in a range of nickel plated brass fittings, mechanically swaged using stainless steel ferrules. Each hose can be manufactured to specific lengths in small or large volume quantities.

Further information such as bend radius, special lengths and special end fittings, please contact our sales office.

Hose end fittings

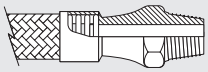

Fig 1. Fixed hexagon male (taper)

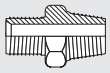

Fig 6. Male to male adaptor (parallel to taper)

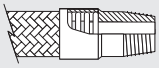

Fig 11. Fixed plane male

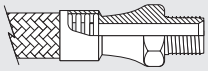

Fig 2. Fixed hexagon male (parallel)

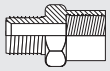

Fig 7. Male to female adaptor (parallel to parallel)

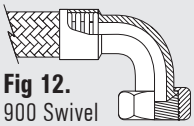

Fig 12. 900 Swivel female coneseat

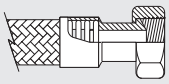

Fig 3. Swivel female 600 coneseat

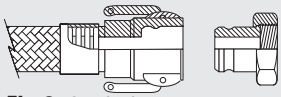

Fig 8. Camlocks

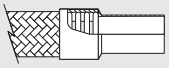

Fig 13. Standpipe

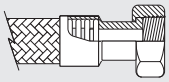

Fig 4. Swivel female flatseat

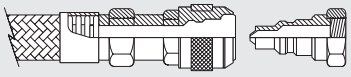

Fig 9. Quick release couplings

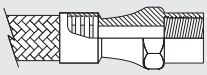

Fig 14. Fixed female (parallel)

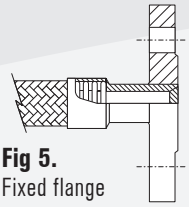

Fig 5. Fixed flange

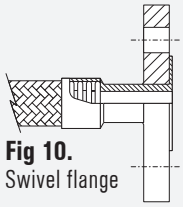

Fig 10. Swivel flange

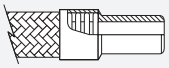

Fig 15. Butt weld end

Above are samples of some of the end fittings that can be fully welded onto the hose. Available in different grades of stainless steel and mild steel.

Construction of metal hoses

Impact of operating conditions on construction and calculations of metal hoses

Pressures and bend radii specified in this catalogue should only be used as estimates. They are valid for the temperature of 20°C and static loads.

Pressure values provided in the table are based on the safety factor of 3 against the rated burst pressure.

Unless otherwise specified, each metal hose is subject to pressure tightness test with the test pressure 1.3 times the working pressure.

Actual operating conditions (vibrations, pulsations, high temperature, types and directions of movements, etc.) generate additional requirements for the hose material and construction.

Hose calculations should take into account the impact of operating conditions on the reduction factors shown below.

Single bends
Minimum bend radius for single movements of the hose is tested according to ISO 10380 7.4.2 Item 2.

Repeated even movements
For repeated even movements that occur several times, there are no additional calculation requirements— the bend radius values should be selected from the tables.

Frequent uneven movements
For frequent hose movements, the permitted bend radius should be determined with the following formulas by choosing the reduction factors based on the actual operating conditions.

Permitted working pressure P_{dop}

$$P_{dop} = P_{max} \cdot f_t \cdot f_{dyn}$$

P_{dop} - permitted working pressure [bar]
f_t - temperature impact factor
P_{max} - pressure value from the table
f_{dyn} - dynamic load impact factor

Permitted bend radius R_{dyn}

$$R_{dyn} = R_b/(1.09 + f_t * f_{dyn} + 1/f_t + 1/f_{dyn})$$

R_{dyn} - permitted bend radius [mm]
R_b - bend radius for repeat movements from the table [mm]
f_{dyn} - dynamic load impact factor
f_t - temperature impact factor

Selecting coupling material based on operating conditions

The pressure and bend radius values shown in this catalogue should be used as estimates. They are valid for the ambient temperature of 20°C. At higher temperatures, the below coupling recommendations should be followed.

The couplings may be used for the maximum working pressure as shown in the table, provided that the temperature does not exceed:

Brass	**50°C**
Cast iron	**120°C**
Carbon steel	**120°C**
Stainless steel	**300°C**

For higher temperatures, please follow the recommendations below.

For more information, please contact our engineering department.

Material - Carbon steel
Maximum permitted working pressure should be reduced if the temperature exceeds 120°C. The reduction factor is selected based on the coupling type and grade of steel.

Material - Stainless steel
The permitted pressure must be reduced if the working temperature exceeds 300°C.

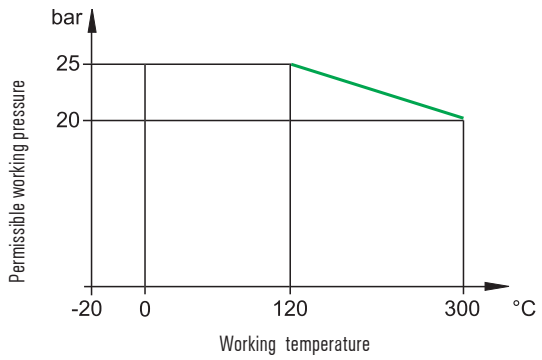

Working temperature °C	Permitted working pressure bar
-20 to +120	25
+120 to +300	See the diagram
300	20

Reduction factors for various operating conditions

Temperature impact factor f_t

Working temperature °C	Material X 5 CrNi 18 10 (1.4301)	Material X 6 CrNiTi 18 10 (1.4541)	Material X 2 CrNiMo 17 13 2 (1.4404)	Material X 6 CrNiMo 17 12 2 (1.4571)	Material X 2 CrNiMo 18 14 3 (1.4435)	Material NiCr 22 Mo Nb (2.4856)	Material NiCr 21 Mo (2.4858)
20	1.00	1.00	1.00	1.00	1.00	1.00	1.00
50	0.92	0.94	0.96	0.96	0.96	0.93	0.97
100	0.83	0.89	0.88	0.89	0.88	0.85	0.94
150	0.75	0.83	0.80	0.84	0.80	0.82	0.88
200	0.68	0.79	0.74	0.80	0.74	0.78	0.82
250	0.63	0.74	0.70	0.76	0.70	0.76	0.80
300	0.59	0.71	0.64	0.71	0.64	0.73	0.78
350	0.56	0.69	0.62	0.69	0.62	0.71	0.76
400	0.54	0.66	0.60	0.67	0.60	0.68	0.74
450	0.53	0.65	0.58	0.65	0.58	0.67	0.72
500	0.52	0.63	0.57	0.64	0.57	0.66	
550	0.52	0.63	0.56	0.64	0.56		

Dynamic load impact factor f_{dyn}

Flow \ Movement	No vibrations, even movements	Slight vibrations, frequent, even movements	Large vibrations, sustained offset movements
Steady, even flow	1.00	0.80	0.40
Pulsating, slowly growing flow	0.80	0.64	0.32
Pulsating, burst flow	0.40	0.32	0.16

Flow with a Reynold's number exceeding $5x10^4$ may damage the hose due to turbulences. Please contact our engineering department.

Calculation example
KE-Masterhose® DN 50 type HS10 U1 single-braided hose made of steel 1.4301 (OH18N9) operating under the temperature of 300°C is subject to slight vibrations and frequent even movements with pulsating and slowly growing flow:

$P_{max.}$ = 40 bar, R_b = 280 mm, f_t= 0,59, $f_{dyn.}$= 0,64

$P_{dop.} = P_{max.} \cdot f_t \cdot f_{dyn.}$

$P_{dop.} = 40 \cdot 0{,}59 \cdot 0{,}64$

$$R_{dyn.} = \frac{R_b}{2{,}98}\left(1{,}09 + f_t \cdot f_{dyn.} + \frac{1}{f_t} + \frac{1}{f_{dyn.}}\right)$$

$$R_{dyn.} = \frac{280}{2{,}98}\left(1{,}09 + 0{,}59 \cdot 0{,}64 + \frac{1}{0{,}59} + \frac{1}{0{,}64}\right)$$

$P_{dop.}$ = 15,1 bar

$R_{dyn.}$ = 444 mm

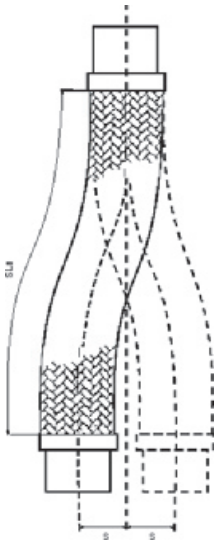

How to determine proper hose length for lateral offset movements

To ensure proper and long-term operation of the hose, the correct length must be selected based on the required offset movements.

Do not use hoses that are too short or too long. The selection tables below help to determine an optimal live length of a hose. They are valid for standard HS10-U1 hoses.

To calculate an overall hose length, add the length of selected couplings as specified in proper tables of this catalogue.

Lateral offset capability based on hose length

DN	Lateral offset capability "S" [mm]							
	SL_B	10	25	50	75	100	125	150
6		90	140	200	245	285	315	345
8		95	150	210	260	300	335	365
10		100	160	225	275	315	355	385
12		110	175	245	300	345	385	425
16		120	185	265	325	375	420	460
20		130	205	290	355	410	460	505
25		140	220	310	380	440	495	540
32		150	235	330	405	470	525	575
40		160	255	360	440	510	570	625
50		175	275	390	475	550	610	670
65		190	305	430	525	610	680	745
80		210	330	465	570	655	735	805
100		225	360	505	620	715	800	875
125		310	490	690	845	975	1090	1195
150		330	525	740	910	1050	1175	1285
200		375	590	835	1025	1185	1325	1450
250		405	642	905	1110	1285	1435	1570

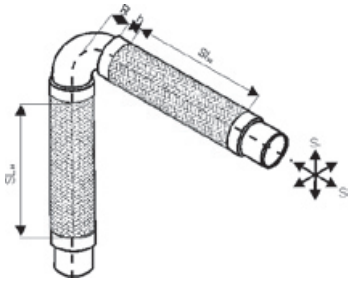

Flexible angle joint

In case of multi-plane movements, it is recommended to use a flexible angle joint instead of a single hose.

DN	Total travel $S_1 + S_2$ [mm]								h	R DIN2605
	SLb1,b2	10	25	50	75	100	125	150		
6		80	120	170	210	245	270	300	15	
8		85	130	180	225	260	290	315	15	
10		90	140	195	240	275	310	330	15	
12		95	150	210	260	300	330	365	20	28
16		105	160	230	280	325	360	400	20	28
20		115	175	250	305	355	400	435	20	28,5
25		120	190	270	330	380	430	470	20	38
32		130	205	290	350	410	460	500	25	47,5
40		140	220	325	380	440	500	540	25	57
50		150	240	340	410	475	530	580	25	76
65		165	265	370	450	530	590	645	25	95
80		180	290	400	495	570	640	700	30	114,5
100		195	325	435	540	620	700	760	30	152,5
125		270	425	510	730	840	940	1040	30	190,5
150		290	455	640	790	900	1020	1120	30	228,5

*If in doubt while determining the proper hose length, please contact our engineering department.

How to calculate hose length for horizontal, vertical and bending movements

Caution!
Do not twist hoses during installation.
Both couplings must be in the same plane.

Horizontal movement

NL=4R + 2L^{a} + 1.57s

L1 = 1.43R + L^{a} + 0.785s
L2 = 1.43R + L^{a} + $^{s}/_{2}$

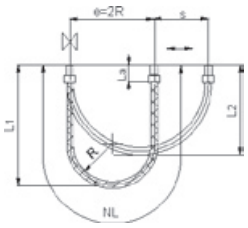

Vertical movement

NL=4R + 2L^{a} + $^{s}/_{2}$

L1 = 1.43R + L^{a} + $^{s}/_{2}$
L2 = 1.43R + L^{a}

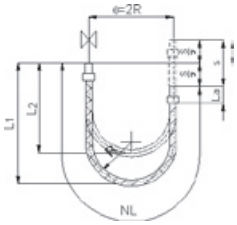

Bending movement

NL=2.5R + 2L^{a}

a=1.465R + L^{a}

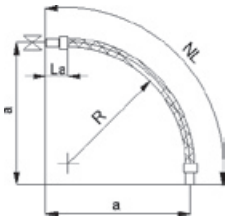

R	Bend radius (from the catalogue)
La	Coupling length (from the catalogue)
L1	Maximum loop depth
L2	Minimum loop depth
e	Coupling spacing
s	Travel
NL	Required hose length

Enquiry Data Sheet

			Date
Company		Department	
Contact Person		Phone	
Street Address		Fax	
Post Code		E-mail	

Enquiry/Project No.					
No. of pcs.			Nominal diameter		DN
Overall length		mm	Hose material		
Working pressure		bar	Bend radius		mm
Outer pressure		bar			
Coupling – one side			Coupling material		
Coupling – other side			Coupling material		
Medium			Temperature		°C
Outer medium			Temperature		°C

	Static operation, no movements			No vibrations		Steady, even flow
	Slight, slow movements			Slight vibrations		Pulsating, slowly growing flow
	Steady movement			Large vibrations		Burst flow
	Frequent, even movement				Additional reinforcement	
Travel			mm			With outer shield
Flow rate			m^3/h			Motion stops

Types of hose movements

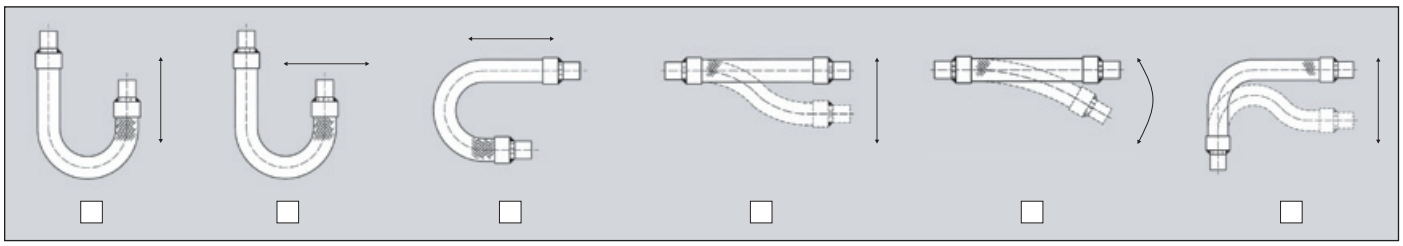

Purpose

Application

Certificates and approvals required

Please fill in legibly as many data sheet fields as possible. If you have any doubts or queries, please contact our engineering department.

KE-Masterhose® installation instructions

Installation

Stainless steel hose assemblies should never be subjected to TORQUE.

To reduce twisting during installation a swivel fitting can be used at one end and the fixed fitting tightened up first.

Two spanners should be used for union fittings.

The hoses should not be twisted when flexed. Care should be taken that the installation only permits movement or flexing along the axis of the hose.

The minimum bend radii should not be exceeded for both dynamic movement (i.e. constant movement) and static flexing (i.e. vibration). If smaller bend radii are required then the more flexible close pitch hose can be used.

Wrong		Right
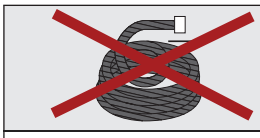	Do not pull out. Unwind.	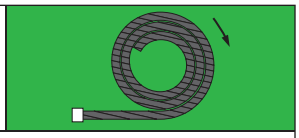
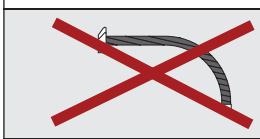	Do not twist the hose axially.	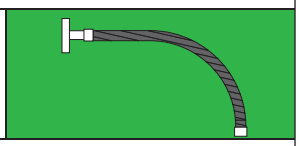
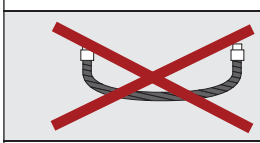	Do not install hoses of insufficient length. Use proper length hoses.	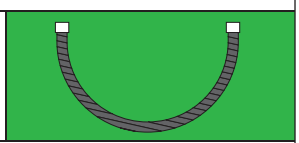
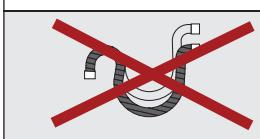	Do not overbend. Use elbows.	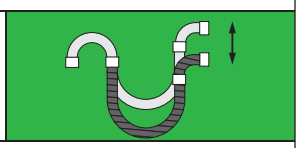
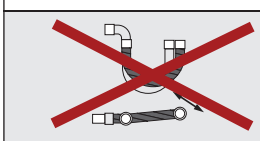	Do not allow movements across the installation plane. Maintain one plane.	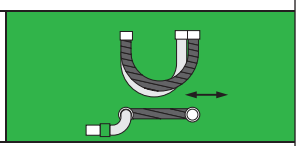
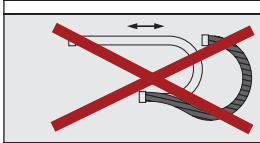	Do not allow the hose to overbend under its own weight. Use additional support guides.	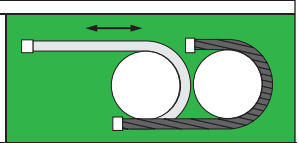
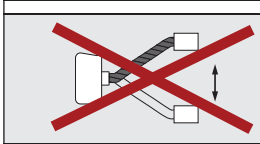	Avoid excessive offset movements when installing in a straight line. Install in the shape of a bend.	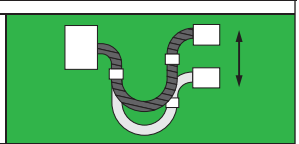
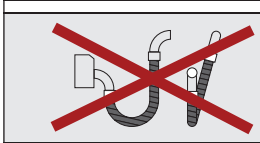	Do not install when coupling planes are not aligned. Couplings must be in one plane.	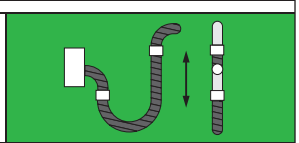
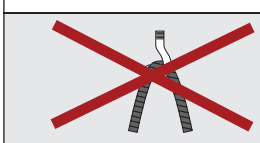	Do not overbend when suspending. Use proper suspension.	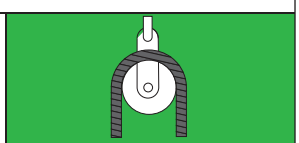
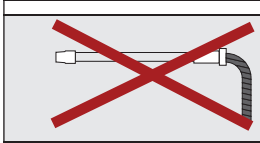	Do not overbend at coupling. Use proper coupling shapes.	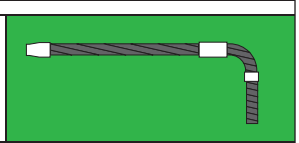
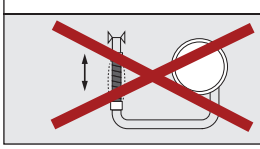	Avoid axial vibrations. Install perpendicular to vibration direction.	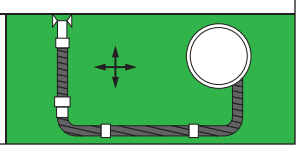

KE-Masterhose® installation instructions

Wrong		Right
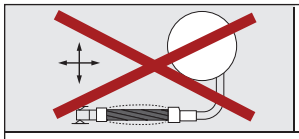	Avoid multi-direction vibrations on a single hose. Install hoses angularly.	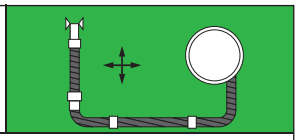
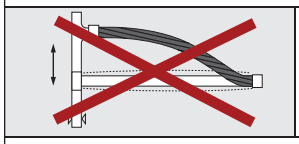	Avoid lateral offset in one direction. Use symmetrical offset from the neutral position.	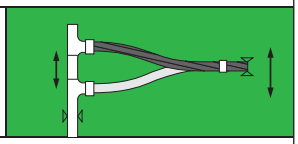
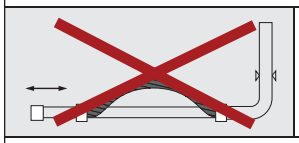	Avoid axial offset. Use lateral offset instead.	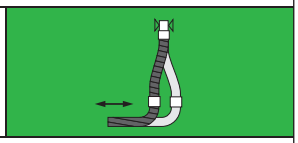
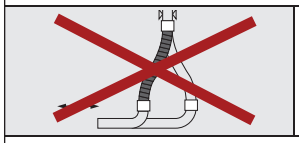	Avoid excessive lateral offset. Install hose in a shape of a bend.	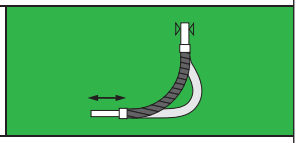
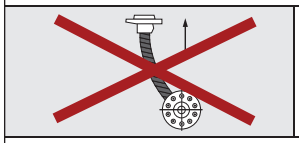	Do not allow the host to twist during movements. Allow movements only in the coupling plane.	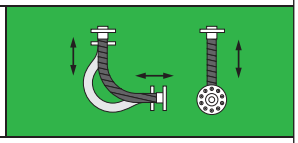
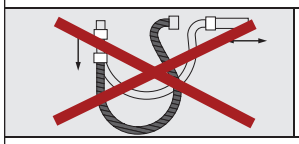	Do not overbend hoses near couplings. Use elbows.	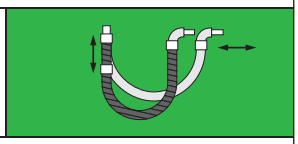
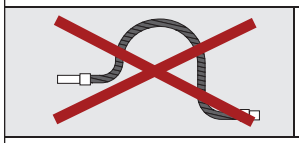	Do not use hoses of excessive length. The hose length must be precisely defined.	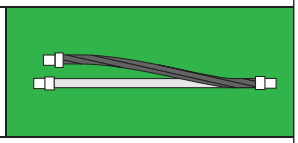
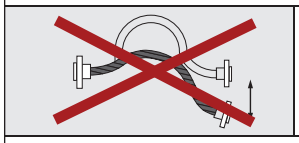	Do not use hoses of excessive length. Use hoses of proper length.	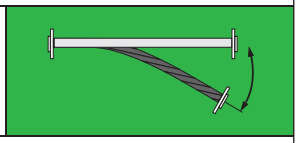
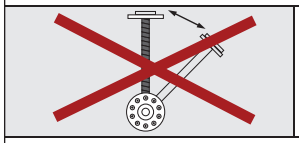	Do not allow the hose to twist during movements. Allow movements only in one plane.	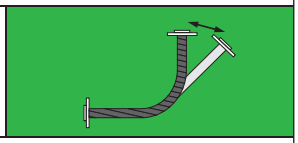
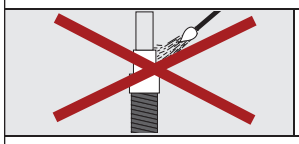	Keep a torch away from the pipe-to-hose connection during installation. Cool the connection; do not allow overheating.	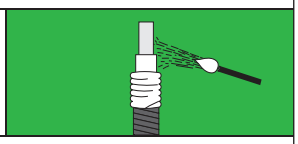
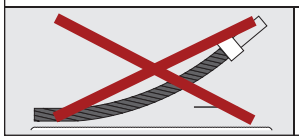	Do not drag the hose without special protection. Use additional shielding elements.	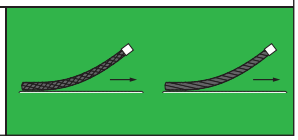

HS 10
KE-MASTERHOSE®

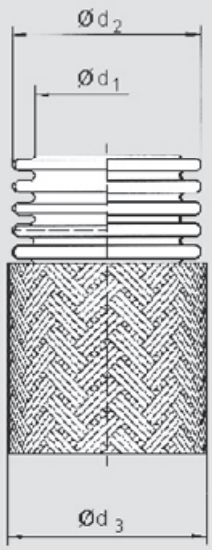

Hose construction	HS10U0	HS10U1	HS10U2
	Unbraided hose	Single-braided hose	Double-braided hose

Temperature range	-270°C to +600°C

Material	High-alloy austenitic steel	
	Hose (DIN 17441)	Braid (DIN 17440)*
Other materials upon request.	AISI 321	(1.4301) AISI 304
	AISI 316TI	(1.4301) AISI 304

DN	Type	Diameters					Bend radius		Working pressure	Weight
		ID		OD			Moderate movements	Frequent movements	For temp. 20°C	
		d_1	Tol. ±	d_2	d_3	Tol. ±	R_{st}	R_b	p_{max}	(± 10%)
[mm / in]		[mm]	[mm]	[mm]	[mm]	[mm]	[mm]	[mm]	[bar]	[kg/m]
8 / 5/16"	HS 10 U 0 HS 10 U 1 HS 10 U 2	8.0	0.2	12.5 - -	- 14.6 16.7	0.3 0.4 0.5	14 24 24	90 90 110	16.0 160.0 180.0	0.06 0.21 0.36
10 / 3/8"	HS 10 U 0 HS 10 U 1 HS 10 U 2	10.2	0.2	15.9 - -	- 18.0 20.1	0.3 0.4 0.5	17 29 29	100 100 125	12.0 130.0 180.0	0.13 0.30 0.48
12 / 1/2"	HS 10 U 0 HS 10 U 1 HS 10 U 2	12.9	0.2	19.2 - -	- 21.3 23.4	0.3 0.4 0.5	20 34 34	120 120 140	8.0 110.0 150.0	0.16 0.38 0.59
16 / 5/8"	HS 10 U 0 HS 10 U 1	15.9	0.2	22.8 -	- 24.9	0.3 0.4	26 44	140 140	5.0 85.0	0.19 0.43
20 / 3/4"	HS 10 U 0 HS 10 U 1	19.8	0.2	27.0 -	- 29.1	0.3 0.4	32 53	160 160	3.0 65.0	0.23 0.52
25 / 1"	HS 10 U 0 HS 10 U 1	25.1	0.3	33.0 -	- 35.1	0.4 0.5	38 64	180 180	3.0 50.0	0.29 0.64
32 / 1 1/4"	HS 10 U 0 HS 10 U 1	31.7	0.3	42.0 -	- 44.7	0.4 0.5	47 79	210 210	2.0 40.0	0.39 1.02
40 / 1 1/2"	HS 10 U 0 HS 10 U 1	40.7	0.3	52.0 -	- 54.7	0.4 0.5	59 98	240 240	0.8 45.0	0.60 1.36
50 / 2"	HS 10 U 0 HS 10 U 1	49.9	0.4	63.0 -	- 65.7	0.5 0.6	72 120	280 280	0.8 40.0	0.76 1.63
65 / 2 1/2"	HS 10 U 0 HS 10 U 1	65.0	0.4	80.0 -	- 82.7	0.5 0.6	90 150	330 330	0.7 26.0	0.97 2.04
80 / 3"	HS 10 U 0 HS 10 U 1	80.0	0.5	97.0 -	- 100.6	0.6 0.7	108 180	460 460	0.7 29.0	1.47 3.45
100 / 4"	HS 10 U 0 HS 10 U 1	100.1	0.5	119.0 -	- 122.6	0.6 0.7	131 218	530 530	0.3 20.0	1.81 3.89
125 / 5"	HS 10 U 0 HS 10 U 1	124.9	0.6	145.6 -	- 150.4	0.7 0.8	189 315	800 800	0.2 20.0	2.58 6.00
150 / 6"	HS 10 U 0 HS 10 U 1	150.4	0.7	173.2 -	- 178.0	0.8 0.9	216 360	1050 1050	0.1 23.0	3.55 8.28
200 / 8"	HS 10 U 0 HS 10 U 1	200.7	0.8	227.0 -	- 231.8	0.9 1.0	281 468	1300 1300	<0.1 15.0	4.75 10.46
250 / 10"	HS 10 U 0 HS 10 U 1	250.6	0.8	280.3 -	- 285.1	0.9 1.0	335 558	1700 1700	<0.1 8.0	7.37 13.62
300 / 12"	HS 10 U 0 HS 10 U 1	300.6	1.0	333.1 -	- 337.9	1.1 1.2	389 648	2000 2000	<0.1 6.0	8.82 14.95

Corrugated hose made of high-alloy stainless steel, annular corrugations.

Single wall, medium wall thickness, standard corrugation pitch

Please include the following information in your order:

- Hose type
- Hose material
- Nominal diameter [DN]
- Overall length
- Number of braids (U0, U1, U2)
- Couplings (Type and material)
- Working pressure
- Working temperature

HL 20
KE-MASTERHOSE®

Hose construction	HL 20U0	HL 20U1	HL 20U2
	Unbraided hose	Single-braided hose	Double-braided hose

Temperature range	-270°C to +600°C

Material	High-alloy austenitic steel	
	Hose (DIN 17441)	Braid (DIN 17440)
Other materials upon request.	(1.4541) AISI 321	(1.4301) AISI 304
	(1.4571) AISI 316TI	(1.4301) AISI 304

DN	Type	Diameters					Bend radius		Working pressure	Weight
		ID		OD			Moderate movements	Frequent movements	For temp. 20°C	
		d1	Tol. ±	d2	d3	Tol. ±	Rst	Rb	pmax	(± 10%)
[mm / in]		[mm]	[mm]	[mm]	[mm]	[mm]	[mm]	[mm]	[bar]	[kg/m]
6 / 1/4"	HL 20 U 0 HL 20 U 1 HL 20 U 2	7.0	0.25	9.8 - -	- 11.5 13.1	0.3 0.4 0.5	16 25 25	100 100 100	10.0 167.0 220.0	0.08 0.16 0.25
8 / 5/16"	HL 20 U 0 HL 20 U 1 HL 20 U 2	8.3	0.25	11.8 - -	- 13.5 15.2	0.3 0.4 0.5	20 32 32	130 130 130	10.0 136.0 210.0	0.12 0.23 0.33
10 / 3/8"	HL 20 U 0 HL 20 U 1 HL 20 U 2	10.3	0.25	14.6 - -	- 16.3 18.0	0.3 0.4 0.5	22 38 38	150 150 150	5.5 100.0 178.0	0.16 0.27 0.38
12 / 1/2"	HL 20 U 0 HL 20 U 1 HL 20 U 2	14.9	0.30	19.3 - -	- 20.9 22.6	0.3 0.4 0.5	24 45 45	165 165 165	5.5 74.0 103.0	0.17 0.35 0.52
16 / 5/8"	HL 20 U 0 HL 20 U 1 HL 20 U 2	16.0	0.30	21.7 - -	- 23.4 25.1	0.3 0.4 0.5	28 50 50	195 195 195	5.0 70.0 125.0	0.28 0.46 0.63
20 / 3/4"	HL 20 U 0 HL 20 U 1 HL 20 U 2	20.1	0.30	25.5 - -	- 27.4 29.3	0.3 0.4 0.5	30 70 70	200 200 200	4.1 65.0 86.0	0.27 0.53 0.79
25 / 1"	HL 20 U 0 HL 20 U 1 HL 20 U 2	27.4	0.40	33.3 - -	- 35.8 38.3	0.4 0.5 0.6	44 85 85	250 250 250	4.0 50.0 76.0	0.32 071 1.10
32 / 1 1/4"	HL 20 U 0 HL 20 U 1 HL 20 U 2	34.3	0.40	40.7 - -	- 43.2 45.7	0.4 0.5 0.6	55 105 105	250 250 250	4.01 65.0 86.0	0.40 0.86 1.32
40 / 1 1/2"	HL 20 U 0 HL 20 U 1 HL 20 U 2	39.4	0.40	47.5 - -	- 50.0 52.5	0.4 0.5 0.6	70 127 127	250 250 250	2.4 35.0 55.0	0.67 1.19 1.71
50 / 2"	HL 20 U 0 HL 20 U 1 HL 20 U 2	53.0	0.40	61.7 - -	- 64.2 66.7	0.4 0.5 0.6	90 160 160	350 350 350	1.0 30.0 44.0	0.82 1.56 2.29
65 / 2 1/2"	HL 20 U 0 HL 20 U 1 HL 20 U 2	64.3	0.40	76.1 - -	- 78.6 81.1	0.4 0.5 0.6	110 200 200	410 410 410	1.0 26.0 46.0	1.80 2.68 3.57
80 / 3"	HL 20 U 0 HL 20 U 1 HL 20 U 2	76.5	0.40	89.4 - -	- 91.9 94.5	0.4 0.5 0.6	130 230 230	450 450 450	1.0 22.0 40.0	2.21 3.29 4.37

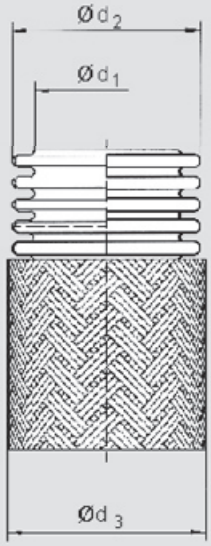

Corrugated hose made of high-alloy stainless steel, annular corrugations.

Single wall, medium wall thickness, low corrugation depth

Please include the following information in your order:

- Hose type
- Hose material
- Nominal diameter [DN]
- Overall length
- Number of braids (U0, U1, U2)
- Couplings (Type and material)
- Working pressure
- Working temperature

HC 30
KE-MASTERHOSE®

Hose construction	HC 30U0	HC 30U1
	Unbraided hose	Single-braided hose

Temperature range	-270°C to +600°C

Material Other materials upon request.	High-alloy austenitic steel	
	Hose (DIN 17441)	Braid (DIN 17440)
	(1.4541) AISI 321	(1.4301) AISI 304
	(1.4571) H18N10MT, AISI 316TI	(1.4301) AISI 304

DN	Type	Diameters					Bend radius		Working pressure	Weight
		ID		OD			Moderate movements	Frequent movements	For temp. 20°C	
		d1	Tol. ±	d2	d3	Tol. ±	Rst	Rb	pmax	(± 10%)
[mm / in]		[mm]	[mm]	[mm]	[mm]	[mm]	[mm]	[mm]	[bar]	[kg/m]
8 / 5/16"	HC 30 U 0 HC 30 U 1	8.0	0.4	12.7 -	- 14.8	0.5 0.6	16 24	80 80	11.0 160.0	0.08 0.23
10 / 3/8"	HC 30 U 0 HC 30 U 1	10.2	0.4	16.1 -	- 18.2	0.5 0.6	19 29	90 90	8.0 130.0	0.17 0.35
12 / 1/2"	HC 30 U 0 HC 30 U 1	12.9	0.4	19.4 -	- 21.5	0.5 0.6	23. 34	100 100	5.0 110.0	0.21 0.43
16 / 5/8"	HC 30 U 0 HC 30 U 1	15.9	0.4	23.0 -	- 25.1	0.5 0.6	29 44	120 120	3.0 85.0	0.25 0.50
20 / 3/4"	HC 30 U 0 HC 30 U 1	19.8	0.4	27.2 -	- 29.3	0.5 0.6	35 53	135 135	2.0 65.0	0.31 0.60
25 / 1"	HC 30 U 0 HC 30 U 1	25.1	0.5	33.2 -	- 35.3	0.6 0.7	43 64	155 155	2.0 50.0	0.38 0.73
32 / 1 1/4"	HC 30 U 0 HC 30 U 1	31.7	0.5	42.2 -	- 44.9	0.6 0.7	53 79	180 180	1.4 40.0	0.52 1.15
40 / 1 1/4"	HC 30 U 0 HC 30 U 1	40.7	0.5	52.2 -	- 54.9	0.6 0.7	65 98	200 200	0.6 45.0	0.79 1.55
50 / 2"	HC 30 U 0 HC 30 U 1	49.9	0.6	63.2 -	- 65.9	0.7 0.8	80 120	235 235	0.6 40.0	1.00 1.87
65 / 2 1/2"	HC 30 U 0 HC 30 U 1	65.0	0.6	80.2 -	- 82.9	0.7 0.8	100 150	275 275	0.5 26.0	1.28 2.35
80 / 3"	HC 30 U 0 HC 30 U 1	80.0	0.7	97.2 -	- 100.8	0.8 0.9	120 180	360 360	0.4 29.0	1.29 3.01
100 / 4"	HC 30 U 0 HC 30 U 1	100.1	0.7	119.2 -	- 122.8	0.8 0.9	145 218	450 450	0.2 20.0	2.38 4.46
125 / 5"	HC 30 U 0 HC 30 U 1	124.9	0.8	145.8 -	- 150.6	0.9 1.0	210 315	720 720	0.1 20.0	3.68 7.09
150 / 6"	HC 30 U 0 HC 30 U 1	150.4	0.9	173.4 -	- 178.2	1.0 1.1	240 360	900 900	<0.1 23.0	4.97 9.69
200 / 8"	HC 30 U 0 HC 30 U 1	200.7	1.0	227.2 -	- 232.0	1.1 1.2	312 468	1150 1150	<0.1 15.0	6.63 12.34

Corrugated hose made of high-alloy stainless steel, annular corrugations.

Single wall, medium wall thickness, close corrugation pitch

Please include the following information in your order:

- Hose type
- Hose material
- Nominal diameter [DN]
- Overall length
- Number of braids (U0, U1, U2)
- Couplings (Type and material)
- Working pressure
- Working temperature

HT 40 HT 50
KE-MASTERHOSE®

Hose construction	HT 40(50)U0	HT 40(50)U1	HT 40(50)U2
	Unbraided hose	Single-braided hose	Double-braided hose

Temperature range	-270°C to +600°C

Material	High-alloy austenitic steel	
	Hose (DIN 17441)	Braid (DIN 17440)
Other materials upon request.	(1.4571) AISI 316 TI	(1.4301) AISI 304

DN	Type	Diameters					Bend radius		Working pressure	Weight
		ID		OD			Moderate movements	Frequent movements	For temp. 20°C	
		d1	Tol. ±	d2	d3	Tol. ±	Rst	Rb	pmax	(± 10%)
[mm / in]		[mm]	[mm]	[mm]	[mm]	[mm]	[mm]	[mm]	[bar]	[kg/m]
16 / 5/8"	HT 40 U 0	15.9	0.2	22.4	-	0.3	32	225	11.0	0.22
	HT 40 U 1			-	24.5	0.4	58	225	100.0	0.49
	HT 40 U 2			-	26.6	0.5	58	250	160.0	0.75
20 / 3/4"	HT 40 U 0	19.5	0.2	27.0	-	0.3	39	257	7.0	0.30
	HT 40 U 1			-	29.7	0.4	70	257	110.0	0.76
	HT 40 U 2			-	32.4	0.5	70	285	140.0	1.22
25 / 1"	HT 40 U 0	25.0	0.3	33.0	-	0.4	47	293	8.0	0.42
	HT 40 U 1			-	35.7	0.5	85	293	80.0	0.94
	HT 40 U 2			-	38.4	0.6	85	325	120.0	1.45
32 / 1 1/4"	HT 40 U 0	31.7	0.3	42.0	-	0.4	58	342	4.5	0.58
	HT 40 U 1			-	44.7	0.5	105	342	80.0	1.28
	HT 40 U 2			-	47.4	0.6	105	380	90.0	1.98
40 / 1 1/2"	HT 40 U 0	40.5	0.3	52.0	-	0.4	72	387	4.5	0.96
	HT 40 U 1			-	54.7	0.5	130	387	70.0	1.81
	HT 40 U 2			-	57.4	0.6	130	430	105.0	2.67
50 / 2"	HT 40 U 0	49.7	0.4	63.0	-	0.5	88	441	4.0	1.21
	HT 40 U 1			-	65.7	0.6	160	441	55.0	2.25
	HT 40 U 2			-	68.4	0.7	160	490	88.0	3.29
65 / 2 1/2"	HT 40 U 0	64.7	0.4	80.0	-	0.5	110	522	3.0	1.56
	HT 40 U 1			-	83.6	0.6	200	522	50.0	3.39
	HT 40 U 2			-	87.2	0.7	200	580	60.0	5.22
80 / 3"	HT 40 U 0	79.6	0.5	97.0	-	0.6	132	648	3.0	2.37
	HT 40 U 1			-	100.6	0.7	240	648	40.0	4.37
	HT 40 U 2			-	104.2	0.8	240	720	45.0	6.36
100 / 4"	HT 50 U 0	99.7	0.5	123.0	-	0.6	160	810	0.9	3.51
	HT 50 U 1			-	127.8	0.7	290	810	32.0	6.79
	HT 50 U 2			-	132.6	0.8	290	900	40.0	10.07
125 / 5"	HT 50 U 0	124.4	0.6	150.5	-	0.7	210	1013	0.5	5.24
	HT 50 U 1			-	155.3	0.8	350	1013	24.0	8.71
	HT 50 U 2			-	160.1	0.9	350	1125	37.0	12.17
150 / 6"	HT 50 U 0	150.0	0.7	178.5	-	0.8	280	1395	0.5	6.30
	HT 50 U 1			-	183.3	0.9	400	1395	24.0	11.14
	HT 50 U 2			-	188.1	1.0	400	1550	37.0	15.98
200 / 8"	HT 50 U 0	200.3	0.8	232.5	-	0.9	416	1800	0.4	8.28
	HT 50 U 1			-	237.3	1.0	520	1800	16.0	14.08
	HT 50 U 2			-	242.1	1.1	520	2000	25.0	19.87
250 / 10"	HT 50 U 0	250.0	0.8	285.0	-	0.9	558	2250	0.3	13.24
	HT 50 U 1			-	289.8	1.0	620	2250	11.0	19.54
	HT 50 U 2			-	294.6	1.1	620	2500	19.0	25.84
300 / 12"	HT 50 U 0	300.0	1.0	337.4	-	1.1	720	2700	0.3	15.56
	HT 50 U 1			-	342.2	1.2	720	2700	7.0	21.74
	HT 50 U 2			-	347.0	1.3	720	3000	13.0	27.92

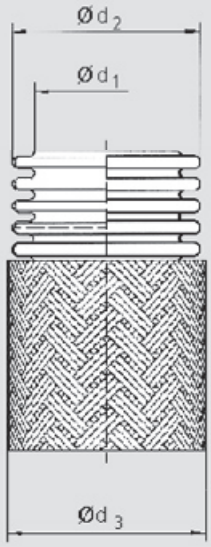

Corrugated hose made of high-alloy stainless steel, annular corrugations.

Single wall, THICK walled, standard corrugation pitch.

Please include the following information in your order:

- Hose type
- Hose material
- Nominal diameter [DN]
- Overall length
- Number of braids (U0, U1, U2)
- Couplings (Type and material)
- Working pressure
- Working temperature

HZ 60
KE-MASTERHOSE®

Hose construction	HZ 60U1	HZ 60U1	HZ 60U1
	Unbraided hose	Single-braided hose	Double-braided hose

Temperature range	-270°C to +600°C

Material	High-alloy austenitic steel	
	Hose (DIN 17441)	Braid (DIN 17440)
Other materials upon request.	(1.4571) AISI 316 Ti	(1.4301) AISI 304

DN	Type	Diameters					Bend radius		Working pressure	Weight
		ID		OD			Moderate movements	Frequent movements	For temp. 20°C	
		d1	Tol. ±	d2	d3	Tol. ±	Rst	Rb	pmax	(± 10%)
[mm / in]		[mm]	[mm]	[mm]	[mm]	[mm]	[mm]	[mm]	[bar]	[kg/m]
16 / 5/8"	HZ 60 U 0 HZ 60 U 1 HZ 60 U 2	16.1	0.2	24.0 - -	- 26.1 28.2	0.3 0.4 0.5	40 58 58	85	4.2 125.0 180.0	0.41 0.74 1.07
20 / 3/4"	HZ 60 U 0 HZ 60 U 1 HZ 60 U 2	20.0	0.2	28.0 - -	- 37.0 33.4	0.3 0.4 0.5	45 70 70	110	3.7 107.0 170.0	0.48 0.96 1.44
25 / 1"	HZ 60 U 0 HZ 60 U 1 HZ 60 U 2	25.4	0.3	37.8 - -	- 40.5 43.2	0.4 0.5 0.6	55 85 85	150	3.1 93.0 140.0	0.77 1.38 1.99
32 / 1 1/4"	HZ 60 U 0 HZ 60 U 1 HZ 60 U 2	32.4	0.3	44.7 - -	- 47.4 50.1	0.4 0.5 0.6	70 105 105	210	2.5 73.0 99.0	0.86 1.51 2.16
40 / 1 1/2"	HZ 60 U 0 HZ 60 U 1 HZ 60 U 2	41.3	0.3	57.3 - -	- 60.0 62.7	0.4 0.5 0.6	80 130 130	270	2.2 65.0 95.0	1.51 2.16 3.41
50 / 2"	HZ 60 U 0 HZ 60 U 1 HZ 60 U 2	50.7	0.4	67.1 - -	- 69.8 72.5	0.5 0.6 0.7	100 160 160	350	1.8 53.0 81.0	1.72 2.88 4.04
65 / 2 1/2"	HZ 60 U 0 HZ 60 U 1 HZ 60 U 2	65.9	0.4	82.5 - -	- 85.2 87.9	0.5 0.6 0.7	125 200 200	480	1.3 33.0 50.0	2.00 3.21 4.42
80 / 3"	HZ 60 U 0 HZ 60 U 1 HZ 60 U 2	80.7	0.4	99.1 - -	- 102.7 106.3	0.6 0.7 0.8	150 240 240	600	1.1 36.0 60.0	2.93 5.05 7.18
100 / 4"	HZ 60 U 0 HZ 60 U 1 HZ 60 U 2	100.7	0.4	120.9 - -	- 125.7 130.5	0.6 0.7 0.8	180 290 290	750	0.9 42.0 66.0	3.59 7.19 10.79

Corrugated hose made of high-alloy stainless steel, annular corrugations.

Double wall, medium wall thickness, standard corrugation pitch

Please include the following information in your order:

- Hose type
- Hose material
- Nominal diameter [DN]
- Overall length
- Number of braids (U0, U1, U2)
- Couplings (Type and material)
- Working pressure
- Working temperature

HH 70
KE-MASTERHOSE®

Hose construction	HH 70 U0	HH 70 U1	HH 70 U2
	Unbraided hose	Single-braided hose	Double-braided hose

Temperature range	-270°C to +600°C

Material	High-alloy austenitic steel	
	Hose (DIN 17441)	Braid (DIN 17440)
Other materials upon request.	(1.4541) AISI 321	(1.4301) AISI 304
	(1.4571) AISI 316Ti	(1.4301) AISI 304

DN	Type	Diameters					Bend radius		Working pressure	Weight
		ID		OD			Moderate movements	Frequent movements	For temp. 20°C	
		d1	Tol. ±	d2	d3	Tol. ±	Rst	Rb	pmax	(± 10%)
[mm / in]		[mm]	[mm]	[mm]	[mm]	[mm]	[mm]	[mm]	[bar]	[kg/m]
6 / 1/4"	HH 70 U 0 HH 70 U 1 HH 70 U 2	6.0	0.2	10.1 - -	- 12.2 14.3	0.3 0.4 0.5	16 30 30	140 190 190	40.0 330.0 440.0	0.10 0.26 0.42
8 / 5/16"	HH 70 U 0 HH 70 U 1 HH 70 U 2	8.0	0.2	12.8 - -	- 14.9 17.0	0.3 0.4 0.5	18 40 40	180 230 230	35.0 220.0 320.0	0.14 0.30 0.46
10 / 3/8"	HH 70 U 0 HH 70 U 1 HH 70 U 2	10.0	0.2	15.9 - -	- 18.0 20.1	0.3 0.4 0.5	22 45 45	220 250 250	32.0 200.0 360.0	0.23 0.43 0.63
12 / 1/2"	HH 70 U 0 HH 70 U 1 HH 70 U 2	12.0	0.2	18.7 - -	- 20.8 22.9	0.3 0.4 0.5	28 55 55	250 300 300	30.0 200.0 300.0	0.31 0.58 0.84
16 / 5/8"	HH 70 U 0 HH 70 U 1 HH 70 U 2	16.0	0.2	24.4 - -	- 26.5 28.6	0.3 0.4 0.5	42 75 75	300 350 350	20.0 150.0 250.0	0.43 0.73 1.03

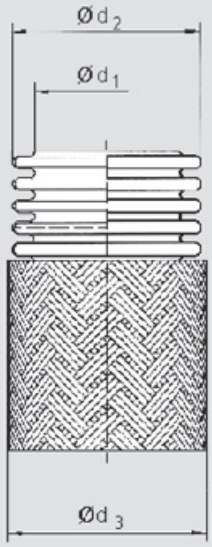

Corrugated hose made of high-alloy stainless steel, annular corrugations.

Single wall, medium wall thickness, standard corrugation pitch - high-pressure version

Please include the following information in your order:

- Hose type
- Hose material
- Nominal diameter [DN]
- Overall length
- Number of braids (U0, U1, U2)
- Couplings (Type and material)
- Working pressure
- Working temperature

TYPE FF
KE-MASTERHOSE®

400 - PN 6 - PN 40

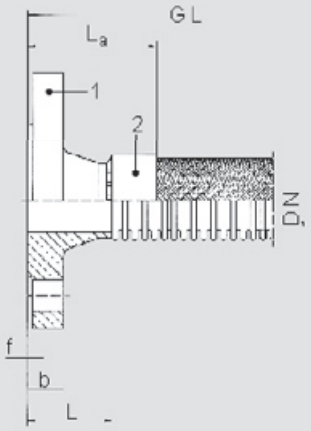

Fixed neck-flange acc. to DIN 2501.

Material	
	St37.2 (1.0038, ANSI) A 570 Gr. 36
	(1.4541) AISI 321
	(1.4571) ALSI 316 Ti

*Other materials upon request

DN		10	16	20	25	32	40	50	65	80	100	125	150	200	250	300
b [mm]	PN* 6	12	12	14	14	14	14	14	14	16	16	18	18	20	22	22
	PN* 10	14	14	16	16	16	16	18	18	20	20	22	22	24	26	26
	PN* 16	14	14	16	16	16	16	18	18	20	20	22	22	24	26	28
	PN* 25	16	16	18	18	18	18	20	22	24	24	26	28	30	32	34
	PN* 40	16	16	18	18	18	18	20	22	24	24	26	28	34	38	42
f [mm]		2	2	2	2	2	3	3	3	3	3	3	3	3	3	4
L [mm]	PN* 6	28	30	32	35	35	38	38	38	42	45	48	48	56	60	62
	PN* 10	35	35	38	38	40	42	45	45	50	52	56	55	62	68	68
	PN* 16	35	35	38	38	40	42	45	45	50	52	56	55	52	70	78
	PN* 25	35	38	40	40	42	45	48	52	58	65	68	75	80	88	92
	PN* 40	35	38	40	40	42	45	48	52	58	65	68	75	88	105	115
L_a [mm]	PN* 6	45	50	52	55	60	63	63	63	72	75	88	88	95	100	102
	PN* 10	52	55	58	58	65	67	70	70	80	82	95	95	102	108	108
	PN* 16	52	55	58	58	65	67	70	70	80	82	95	95	102	110	118
	PN* 25	52	58	60	60	67	70	73	77	88	95	108	115	120	128	132
	PN* 40	52	58	60	60	67	70	73	77	88	95	108	115	128	145	155
Weight ± 10% [kg]	PN* 6	0.34	0.39	0.59	0.75	1.05	1.18	1.34	1.67	2.71	3.24	4.49	5.15	7.78	10.80	14.00
	PN* 10	0.58	0.65	0.95	1.14	1.69	1.86	2.53	3.06	3.70	4.62	6.30	7.75	11.30	14.70	17.40
	PN* 16	0.58	0.65	0.95	1.14	1.69	1.86	2.53	3.06	3.70	4.62	6.30	7.75	11.00	15.60	22.00
	PN* 25	0.66	0.75	1.06	1.29	1.88	2.33	2.82	3.74	4.75	6.52	9.07	11.80	17.00	24.40	31.20
	PN* 40	0.66	0.75	1.06	1.29	1.88	2.33	2.82	3.74	4.75	6.52	9.07	11.80	21.50	34.90	49.70

Connection type:
soldered up to 300°C, welded up to 600°
Please specify type, nominal diameter, material, working temperature and pressure in your order.

*See coupling calculations

Standard sizes

TYPE FF
KE-MASTERHOSE®

405 – PN 10 - PN 40

Material	Steel
	AISI 321
	AISI 316 Ti

*Other materials upon request

*End fittings from different materials can be completed

DN		10	16	20	25	32	40	50	65	80	100	125	150	200	250	300
b [mm]	PN* 6	12	12	14	14	16	16	16	16	18	18	20	20	22	24	24
	PN* 10	14	14	16	16	18	18	19	20	20	22	22	24	24	26	26
	PN* 16	14	14	16	16	18	18	19	20	20	22	22	24	26	29	32
	PN* 25	14	14	16	16	18	18	20	22	24	26	28	30	32	35	38
	PN* 40	14	14	16	16	18	18	20	22	24	26	28	30	36	42	48
L [mm]	PN* 40	55	55	55	55	55	55	65	65	65	65	65	85	85	105	105
La [mm]	PN* 16	72	75	75	75	80	80	90	90	90	95	105	125	125	145	145
Weight ± 10% [kg]	PN* 6	0,5	0,5	0,6	0,6	1,1	1,6	1,7	2,3	3,4	4,1	5,3	6,5	9,6	13,1	17,5
	PN* 10	0,6	0,6	1,1	1,1	2,1	2,1	2,7	3,3	3,9	5,1	6,3	8,5	12,1	16,1	19,0
	PN* 16	0,6	0,6	1,1	1,1	2,1	2,1	2,7	3,3	3,9	5,1	6,3	8,5	12,1	18,1	24,5
	PN* 25	0,6	0,6	1,1	1,1	2,1	2,1	2,7	3,8	4,9	6,6	8,8	12,0	17,1	24,1	32,0
	PN* 40	0,6	0,6	1,1	1,1	2,1	2,1	2,7	3,8	4,9	6,6	8,8	12,0	20,6	33,6	47,0

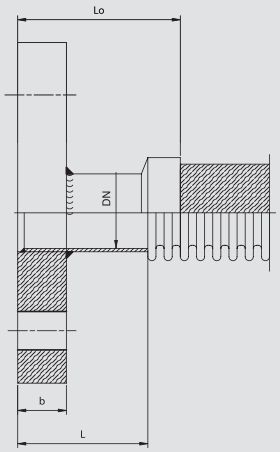

Socket with fixed flange according to EN-1092-1.

Connection type:
soldered up to 300°C, welded up to 600°
Please specify type, nominal diameter, material, working temperature and pressure in your order.

*See coupling calculations

Standard sizes

TYPE FS
KE-MASTERHOSE®

410 – PN 10 - PN 40

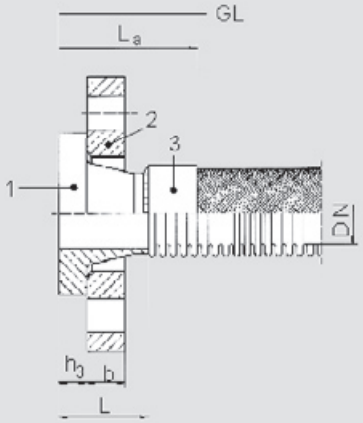

Floating flange with a limiting bush acc. to DIN 2501.

(ANSI Standard on request).

Material	St3S (St37.2) 1.0038
	(1.4541) AISI 321
	(1.4571) AISI 316Ti

*Other materials upon request

*Different coupling materials allowed

DN		10	16	20	25	32	40	50	65	80	100	125	150	200	250	300
b [mm]	PN* 10	14	14	14	16	16	16	16	16	18	18	18	18	20	20	26
	PN* 16	14	14	14	16	16	16	16	16	18	18	18	18	20	24	28
	PN* 25	16	16	16	18	18	18	20	20	22	22	24	24	26	30	34
	PN* 40	16	16	16	18	18	18	20	20	22	22	24	24	30	36	40
h_3 [mm]	PN* 10	10	10	12	12	12	12	14	14	16	16	18	18	20	22	22
	PN* 16	10	10	12	12	12	12	14	14	16	16	18	18	20	22	24
	PN* 25	12	12	14	14	14	14	16	16	18	20	22	22	24	26	28
	PN* 40	12	12	14	14	14	14	16	16	18	20	22	22	26	30	34
L [mm]	PN* 10	35	35	40	40	40	40	45	45	50	50	50	50	55	60	60
	PN* 16	35	35	38	38	40	42	45	45	50	52	55	55	62	70	78
	PN* 25	35	38	40	40	42	45	48	52	58	65	68	75	80	88	92
	PN* 40	35	38	40	40	42	45	48	52	58	65	68	75	88	105	115
L_a [mm]	PN* 10	52	55	60	60	65	65	70	70	80	80	90	90	95	100	100
	PN* 16	52	55	58	58	65	67	70	70	80	82	95	95	102	110	118
	PN* 25	52	58	60	60	67	70	73	77	88	95	108	115	120	128	132
	PN* 40	52	58	60	60	67	70	73	77	88	95	108	115	128	145	155

Connection type:
soldered up to 300°C, welded up to 600°
Please specify type, nominal diameter, material, working temperature and pressure in your order.

*See coupling calculations

Standard sizes

415 – PN 6 - PN 40

Materials	St 37.2 (1.0038) ANSI A 570 Gr. 36)
	(1.4541) AISI 321
	(1.4571) AISI 316 Ti

*Other materials upon request

DN		10	16	20	25	32	40	50	65	80	100	125	150	200	250	300
b [mm]	PN* 6	10	10	10	12	12	12	12	12	14	14	14	14	16	20	24
	PN* 10	14	14	14	16	16	16	16	16	18	18	18	18	20	22	26
	PN* 25	16	16	16	18	18	18	20	20	22	22	24	24	26	30	34
	PN* 40	16	16	16	18	18	18	20	20	22	22	24	24	30	36	40
h_3 [mm]	PN* 6	8	8	10	10	10	10	12	12	14	14	14	14	16	18	18
	PN* 10	10	10	12	12	12	12	14	14	16	16	18	18	20	22	22
	PN* 25	12	12	14	14	14	14	16	16	18	20	22	22	24	26	28
	PN* 40	12	12	14	14	14	14	16	16	18	20	22	22	26	30	34
L [mm]		55	55	55	55	55	55	65	65	65	65	65	88	88	108	108
L_a [mm]		72	75	75	75	80	80	90	90	95	95	105	128	128	148	148
Weight ± 10% [kg]	PN* 6	0.38	0.45	0.60	0.89	1.22	1.43	1.73	2.13	3.38	4.07	5.12	6.32	9.62	14.71	21.42
	PN* 10	0.72	0.84	1.08	1.49	2.11	2.43	3.07	3.72	5.01	5.57	7.31	9.24	13.21	18.67	24.41
	PN* 25	0.83	0.95	1.24	1.68	2.38	2.75	3.70	4.32	5.52	7.62	10.44	13.08	18.88	28.61	39.06
	PN* 40	0.83	0.95	1.24	1.68	2.38	2.75	3.70	4.32	5.52	7.62	10.44	13.08	23.39	38.68	53.06

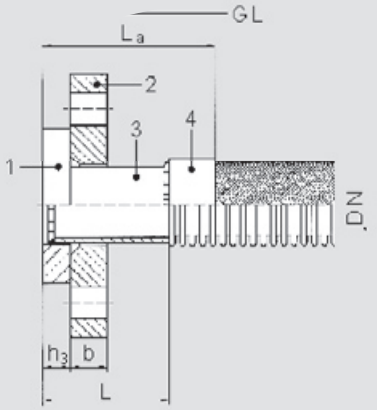

Tubular nozzle with ring collar and floating flange to DIN 2501.

420 – PN 10 / PN 40 (DN 150)

	Orifice	Flange
	AISI 316Ti (1.4571)	(St 37.2) (1.0038)
		(1.4541) AISI 321
		(1.4571) AISI 316Ti

*Other materials upon request

DN		10	16	20	25	32	40	50	65	80	100	125	150	200	250	300
b [mm]	PN* 10	14	14	14	16	16	16	16	16	18	18	18	18	20	22	26
	PN* 16	14	14	14	16	16	16	16	16	18	18	18	18	24	26	28
s_2 [mm]		3	3	3	3	3.5	3.5	3.5	3.5	4	4	4	4	4	5	5
L [mm]		9	9	12	15	15	17	23	23	23	28	30	30	30	30	35
L_a [mm]		26	29	32	35	40	42	48	48	53	58	60	60	70	70	75
Weight ± 10% [kg]	PN* 10	0.59	0.72	0.86	1.20	1.74	2.01	2.42	2.90	3.77	4.22	4.570	5.750	6.426	10.127	11.450
	PN* 16	0.59	0.72	0.86	1.20	1.74	2.01	2.42	2.90	3.77	4.22	4.570	5.750	7.538	11.034	14.274

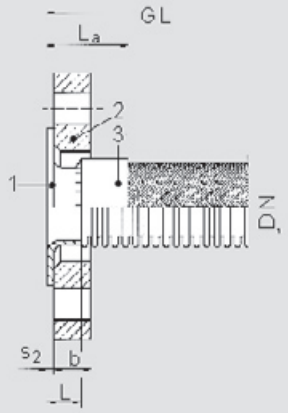

Floating flange with a limiting orifice acc. to DIN 2501 (ISO 7005-1).

TYPE MN
KE-MASTERHOSE®

500

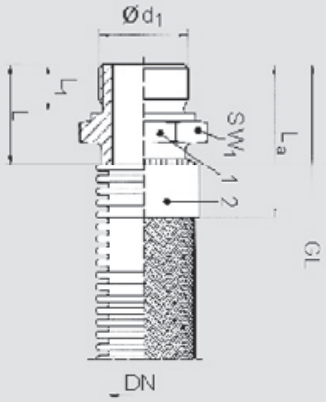

Male nipple with a parallel thread acc. to ISO 228 (BSP).

Materials	Brass
	(St37.2 (1.0038, AISI A570 Gr. 36)
	(1.4571) (AISI 316Ti)

*Other materials upon request

DN	6	8	10	12	16	20	25	32	40	50	65
PN* [bar]	250	250	250	250	160	160	100	100	100	100	25
d_1	G 1/4 A	G 1/4 A	G 3/8 A	G 1/2 A	G 1/2 A	G 3/4 A	G 1 A	G 1 1/4 A	G 1 1/2 A	G 2 A	G 2 1/2 A
L_1 [mm]	12	12	12	14	14	16	18	20	22	24	32
SW_1 [mm]	19	19	22	27	27	32	41	50	55	65	80
L [mm]	25	25	26.5	31	31	34	37	40	45	41	55
L_a [mm]	42	42	43.5	51	51	54	57	65	70	66	80
Weight [kg] ± 10%	0.019	0.021	0.031	0.057	0.049	0.079	0.130	0.193	0.252	0.343	0.515

505

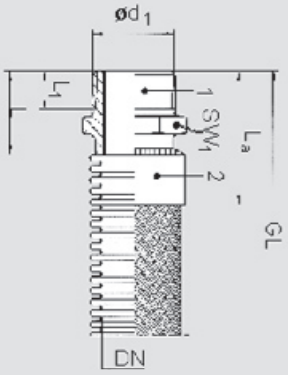

Male nipple with a taper thread acc. to DIN 2999 (BSPT).

Materials	Brass
	(St37.2) (1.0038, AISI A570 Gr. 36)
	(1.4571) AISI 316Ti

*Other materials upon request, NPT thread version available on request

DN	6	8	10	12	16	20	25	32	40	50	65	80	100
PN* [bar]	250	250	250	250	160	160	100	100	100	100	25	25	25
d_1	R 1/4	R 1/4	R 3/8	R 1/2	R 1/2	R 3/4	R 1	R 1 1/4	R 1 1/2	R 2	R 2 1/2	R3	R 4
L_1 [mm]	12	12	12	14	14	16	18	20	22	24	30	32	38
SW_1 [mm]	14	14	17	22	22	27	36	46	50	60	80	95	115
L [mm]	22	22	23	27	27	31	33	35	39	41	53	58	67
L_a [mm]	39	39	40	47	47	51	53	60	64	66	78	88	97
Weight [kg] ± 10%	0.017	0.019	0.027	0.051	0.043	0.073	0.112	0.174	0.224	0.309	0.515	0.995	1.440

Connection type:
soldered up to 300°C, welded up to 600°
Please specify type, nominal diameter, material, working temperature and pressure in your order.

*See coupling calculations

Standard sizes

TYPE MN
KE-MASTERHOSE®

510

Material	Malleable cast iron

*Other materials upon request

DN	6	8	10	12	16	20	25	32	40	50
PN* [bar]	25	25	25	25	25	25	25	25	25	25
d_1	R 1/4	R 1/4	R 3/8	R 1/2	R 1/2	R 3/4	R 1	R 1 1/4	R 1 1/2	R 2
L_1 [mm]	10	10	10	13	13	15	17	19	19	24
SW_1 [mm]	17	17	22	27	27	32	41	50	55	70
L [mm]	32	32	38	44	44	47	53	57	59	68
L_a [mm]	49	49	55	64	64	67	73	82	84	93
Weight [kg] ± 10%	0.031	0.031	0.040	0.070	0.070	0.094	0.149	0.217	0.285	0.494

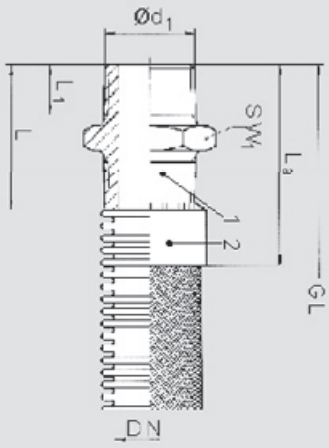

Cast-iron male nipple with a taper thread acc. to DIN 2999.

Connection type:
soldered up to 300°C, welded up to 600°
Please specify type, nominal diameter, material, working temperature and pressure in your order.

*See coupling calculations

Standard sizes

TYPE FM
KE-MASTERHOSE®

515

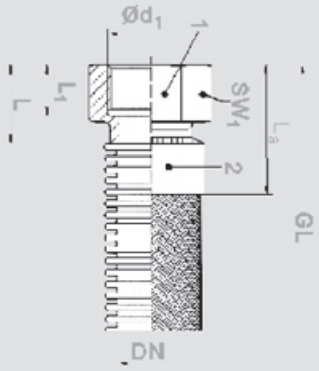

Standard muff with a taper thread acc. to DIN 2999, optional NPT thread.

Materials	Brass
	(St37.2) (1.0038, AISI A570 Gr. 36)
	(1.4571) AISI 316Ti

DN	6	8	10	12	16	20	25	32	40	50
PN* [bar]	250	250	250	250	160	160	100	100	100	100
d_1	Rp 1/4	Rp 1/4	Rp 3/8	Rp 1/2	Rp 1/2	Rp 3/4	Rp 1	Rp 1 1/4	Rp 1 1/2	Rp 2
L_1 [mm]	12	12	12	15	15	16.5	19.5	21.5	22	26
SW_1 [mm]	19	19	22	27	27	32	41	50	55	65
L [mm]	21	21	21	24	24	28	30	32	35	39
L_a [mm]	38	38	38	44	44	48	50	57	60	64
Weight [kg] ± 10%	0.027	0.028	0.033	0.060	0.060	0.084	0.143	0.215	0.256	0.303

520

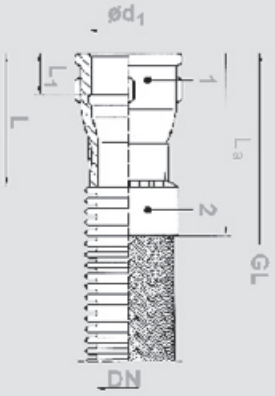

Cast-iron female muff with a taper thread acc. to DIN 2999.

Material	Malleable cast iron

DN	6	8	10	12	16	20	25	32	40	50
PN* [bar]	25	25	25	25	25	25	25	25,	25	25
d_1	Rp 1/4	Rp 1/4	Rp 3/8	Rp 1/2	Rp 1/2	Rp 3/4	Rp 1	Rp 1 1/4	Rp 1 1/2	Rp 2
L_1 [mm]	10	10	10	13	13	5	17	19	19	24
L [mm]	28	28	35	43	43	48	55	60	60	70
L_a [mm]	45	45	52	63	63	68	75	85	85	95
Weight [kg] ± 10%	0.025	0.025	0.045	0.069	0.069	0.097	0.149	0.244	0.270	0.416

Connection type:
soldered up to 300°C, welded up to 600°
Please specify type, nominal diameter, material, working temperature and pressure in your order.

*See coupling calculations

Standard sizes

TYPE SP
KE-MASTERHOSE®

200

Materials	(St37.2) (1.0038, AISI A570 Gr. 36)
	(1.4571) AISI 316Ti

*Other materials upon request

**Pressure acc. to DIN 2353-L

DN DN	6	8	10	12	16	20	25	32	40
PN*/**[bar]	250	250	250	250	160	160	100	100	100
d_1	8	10	12	15	18	22	28	35	42
s [mm]	1.0	1.0	1.0	1.5	1.5	1.5	1.5	2.0	2.0
L [mm]	35	35	35	40	40	40	50	50	66
L_a [mm]	52	52	52	60	60	60	70	75	91
Weight [kg] ± 10%	0.006	0.008	0.009	0.020	0.024	0.030	0.049	0.081	0.130

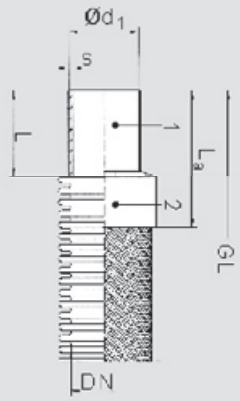

Stub pipe acc. to DIN 2353.

Based on a precision pipe prepared to be fixed with clamping rings

205

Materials	(St37.2) (1.0038, AISI A570 Gr. 36)
	(1.4571) AISI 316Ti

*Other materials upon request

DN	10	12	16	20	25	32	40	50	65	80	100	125	150	200	250	300
PN* [bar]	150	150	150	150	150	110	110	110	50	50	50	50	50	50	50	50
d_1	17.2	21.3	21.3	26.9	33.7	42.4	48.3	60.3	76.1	88.9	114.3	139.7	168.3	219.1	273.0	323.9
s [mm]	1.8	2.0	2.0	2.3	2.6	2.6	2.6	2.9	2.9	3.2	3.6	4.0	4.5	6.3	6.3	7.1
L [mm]	50	50	50	50	50	50	50	60	60	60	60	60	80	80	100	100
L_a [mm]	67	70	70	70	70	75	75	85	85	90	90	100	120	120	140	140
Weight [kg] ± 10%	0.034	0.048	0.048	0.070	0.100	0.128	0.147	0.247	0.315	0.401	0.581	0.790	1.437	2.597	4.094	5.448

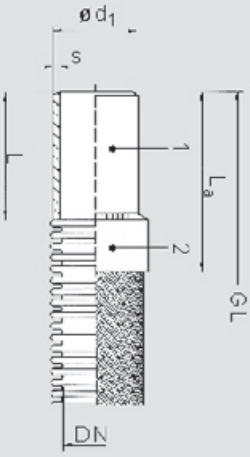

Weld stub pipe.

Connection type:
soldered up to 300°C, welded up to 600°
Please specify type, nominal diameter, material, working temperature and pressure in your order.

*See coupling calculations

Standard sizes

TYPE UC
KE-MASTERHOSE®

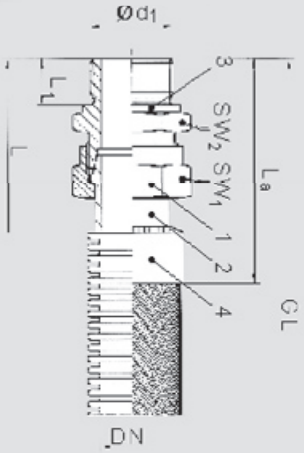

Male union with 24° conical sealing face and parallel thread acc. to ISO 228 (BSP).

300

Materials	Brass
	(St37.2) (1.0038)
	(1.4571) AISI 316Ti

*Other materials upon request; different coupling material variants are possible

DN DN	6	8	10	12	16	20	25	32	40	50
PN* [bar]	250	250	250	250	160	160	100	100	100	100
d_1	G 1/4 A	G 1/4 A	G 3/8 A	G 1/2 A	G 1/2 A	G 3/4 A	G 1 A	G 1 1/4 A	G 1 1/2 A	G 2 B
L_1 [mm]	12	12	12	14	14	16	18	20	22	24
SW_2 [mm]	19	19	22	27	27	32	41	50	55	65
SW_1 [mm]	17	19	22	27	32	36	41	50	60	70
L [mm]	47	49	52	57	59	64	69	76	81	87
L_a [mm]	64	66	69	77	79	84	89	101	106	112
Weight [kg] ± 10%	0.062	0.088	0.119	0.163	0.206	0.251	0.305	0.404	0.521	1.031

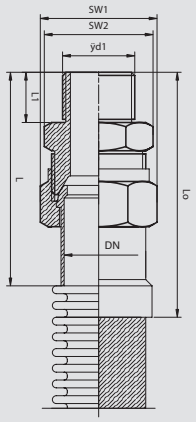

60° taper seal and sphere with male thread according to ISO 228-1.

305

Materials	Steel
	St3S (St37)
	H17N13M2T, H18N10MT (1.4571)

*Other materials upon request; different coupling material variants are possible

DN DN	6	8	10	12	16	20	25	32	40	50
PN* [bar]	250	250	250	250	160	160	100	100	100	100
d_1	G 1/4 A	G 1/4 A	G 3/8 A	G 1/2 A	G 1/2 A	G 3/4 A	G 1 A	G 1 1/4 A	G 1 1/2 A	G 2 B
L_1 [mm]	12	12	12	14	14	16	18	20	22	24
SW_2 [mm]	19	19	22	27	27	32	41	50	55	65
SW_1 [mm]	17	19	22	27	32	36	41	50	60	70
L [mm]	47	49	52	57	59	64	69	76	81	87
L_a [mm]	64	66	69	77	79	84	89	101	106	112
Weight [kg] ± 10%	0.062	0.088	0.119	0.163	0.206	0.251	0.305	0.404	0.521	1.031

Connection type:
soldered up to 300°C, welded up to 600°
Please specify type, nominal diameter, material, working temperature and pressure in your order.

*See coupling calculations

Standard sizes

TYPE UC
KE-MASTERHOSE®

310

Materials	Brass
	(St37.2) (1.0038)
	(1.4571) AISI 316Ti

*Other materials upon request, NPT thread version available on request

DN DN	6	8	10	12	16	20	25	32	40	50
PN* [bar]	250	250	250	250	160	160	100	100	100	100
d_1	R 1/4	R 1/4 A	R 3/8	R 1/2	R 1/2	R 3/4	R 1	R 1 1/4	R 1 1/2	R 2
L_1 [mm]	12	12	12	14	14	16	18	20	22	24
SW_2 [mm]	14	17	19	22	27	32	36	46	55	65
SW_1 [mm]	17	19	22	27	32	36	41	50	60	70
L [mm]	45	47	49	54	56	61	66	73	78	86
L_a [mm]	62	64	66	74	76	81	86	98	103	111
Weight [kg] ± 10%	0.042	0.058	0.072	0.118	0.150	0.206	0.278	0.456	0.646	0.904

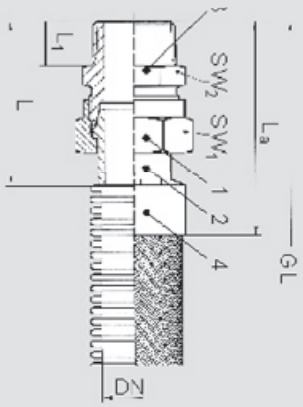

Female union with 24° conical sealing face and straight thread acc. to DIN 2999 (BSPT).

315

Materials	Steel
	St3S (St37)
	H17N13M2T, H18N10MT (1.4571)

*NPT thread version available for the same design upon request

DN DN	6	8	10	12	16	20	25	32	40	50
PN* [bar]	250	250	250	250	160	160	100	100	100	100
d_1	12	12	12	14	14	16	18	20	22	24
SW_1 [mm]	14	17	19	22	27	32	36	46	55	46
SW_2 [mm]	17	19	22	27	32	36	41	50	60	70
L [mm]	45	47	49	54	56	61	66	73	78	86
L_a [mm]	62	64	66	74	76	81	86	98	103	111
Weight [kg] ± 10%	0.042	0.058	0.072	0.118	0.150	0.206	0.278	0.456	0.646	0.904

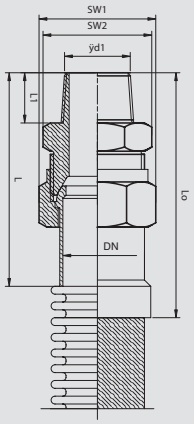

60° taper seal and sphere with male thread according to ISO 1-1; on request NPT.

Connection type:
soldered up to 300°C, welded up to 600°
Please specify type, nominal diameter, material, working temperature and pressure in your order.

*See coupling calculations

Standard sizes

TYPE UC
KE-MASTERHOSE®

320

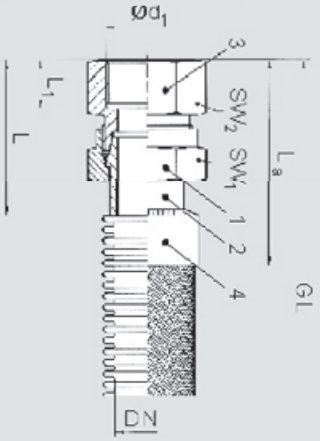

Male union with 24° conical sealing face and parallel thread acc. to ISO 228 (BSPT).

Materials	Brass
	(St37) (1.0038)
	(1.4571) AISI 316 Ti

*NPT thread version available for the same design upon request

DN DN	6	8	10	12	16	20	25	32	40	50
PN* [bar]	250	250	250	250	160	160	100	100	100	100
d_1	Rp 1/4	Rp 1/4	Rp 3/8	Rp 1/2	Rp 1/2	Rp 3/4	Rp 1	Rp 1 1/4	Rp 1 1/2	Rp 2
s [mm]	12	12	12	15	15	16.5	19.5	21.5	22	24
L_1 [mm]	19	19	22	27	27	32	41	50	55	65
SW_2 [mm]	17	19	22	27	32	36	41	50	60	70
SW_1 [mm]	43	45	46	51	52	58	62	68	71	80
L [mm]	60	62	63	71	72	78	82	93	96	105
Weight [kg] ± 10%	0.054	0.062	0.079	0.130	0.155	0.209	0.313	0.480	0.613	0.804

325

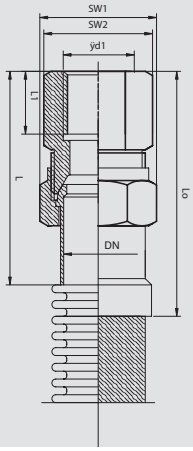

60° taper seal and sphere with female thread according to ISO 7-1; on request NPT.

Materials	Steel
	(St37) (1.0038)
	(1.4571) AISI 316 Ti

*Other materials upon request; different coupling material variants are possible

DN DN	6	8	10	12	16	20	25	32	40	50
PN* [bar]	250	250	250	250	160	160	100	100	100	100
d_1	Rp 1/4	Rp 1/4	Rp 3/8	Rp 1/2	Rp 1/2	Rp 3/4	Rp 1	Rp 1 1/4	Rp 1 1/2	Rp 2
s [mm]	12	12	12	15	15	16.5	19.5	21.5	22	24
L_1 [mm]	19	19	22	27	27	32	41	50	55	65
SW_2 [mm]	17	19	22	27	32	36	41	50	60	70
SW_1 [mm]	43	45	46	51	52	58	62	68	71	80
L [mm]	60	62	63	71	72	78	82	93	96	105
Weight [kg] ± 10%	0.054	0.062	0.079	0.130	0.155	0.209	0.313	0.480	0.613	0.804

Connection type:
soldered up to 300°C, welded up to 600°
Please specify type, nominal diameter, material, working temperature and pressure in your order.

*See coupling calculations

Standard sizes

TYPE UC
KE-MASTERHOSE®

330

Materials	Brass
	St3S (St37.2)
	(1.4571) AISI 316Ti

*Other materials upon request; different coupling material variants are possible

DN DN	6	8	10	12	16	20	25	32	40	50
PN* [bar]	250	250	250	250	160	160	100	100	100	100
d_1	13.5	13.5	17.2	21.3	21.3	26.9	33.7	42.4	48.3	60.3
s [mm]	1.8	1.8	1.8	2.0	2.0	2.3	2.6	2.6	2.6	2.9
L_1 [mm]	8	8	8	10	10	12	12	14	16	18
SW_2 [mm]	14	17	19	22	27	32	41	46	55	65
SW_1 [mm]	17	19	22	27	32	36	41	50	60	70
L [mm]	41	44	45	51	54	60	64	71	75	87
L_a [mm]	58	61	62	71	74	80	84	96	100	112
Weight [kg] ± 10%	0.040	0.048	0.068	0.112	0.146	0.226	0.285	0.448	0.640	1.011

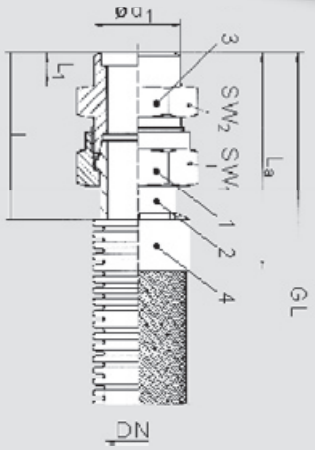

Union with 24° conical sealing face and ISO weld butt.

335

Materials	Malleable cast iron

DN	6	8	10	12	16	20	25	32	40	50
PN* [bar]	250	250	250	250	160	160	100	100	100	100
D_1 [mm]	13.5	13.5	17.2	21.3	21.3	26.9	33.7	42.4	48.3	60.3
L_1 [mm]	1.8	1.8	1.8	2	2	2.3	2.6	2.6	2.6	2.9
SW_1 [mm]	8	8	8	10	10	12	12	14	16	18
SW_2 [mm]	14	17	19	22	27	32	41	46	55	65
SW_3 [mm]	17	19	22	27	32	36	41	50	60	70
L [mm]	41	44	45	51	54	60	64	71	75	87
L_a [mm]	58	61	62	71	74	80	84	96	100	112
Weight [kg] ± 10%	0.040	0.048	0.068	0.112	0.146	0.226	0.285	0.448	0.640	1.011

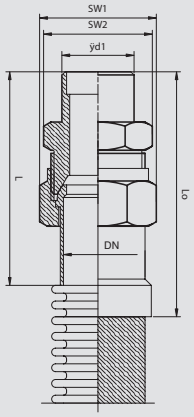

60° taper seal and sphere with ISO weld-neck end.

Connection type:
soldered up to 300°C, welded up to 600°
Please specify type, nominal diameter, material, working temperature and pressure in your order.

*See coupling calculations

Standard sizes

TYPE UC
KE-MASTERHOSE®

340

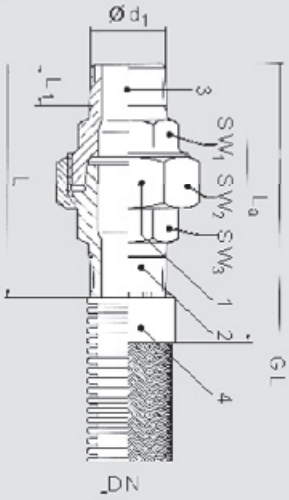

3-part cast-iron male union with 24° conical sealing face and taper thread acc. to DIN 2999.

Materials	Malleable cast iron

DN	6	8	10	12	16	20	25	32	40	50
PN* [bar]	25	25	25	25	25	25	25	25	25	25
d_1	R 1/4	R 1/4	R 3/8	R 1/2	R 1/2	R 3/4	R 1	R 1 1/4	R 1 1/2	R 2
L_1 [mm]	10	10	10	13	13	15	17	19	19	24
SW_1 [mm]	18	18	22	26	26	31	38	48	54	66
SW_2 [mm]	28	28	32	39	39	48	54	67	73	90
SW_3 [mm]	15	15	19	24	31	31	38	48	54	67
L [mm]	69	69	73	84	84	93	103	115	121	136
L_a [mm]	86	86	90	104	104	113	123	140	146	161
Weight [kg] ± 10%	0.105	0.105	0.141	0.215	0.215	0.373	0.507	0.788	1.040	1.492

345

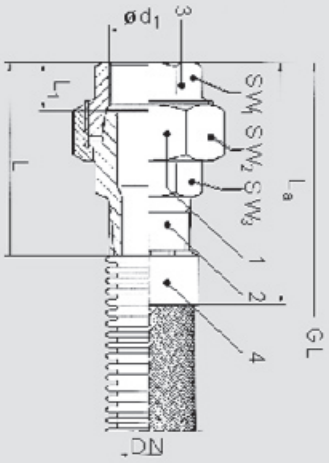

Cast-iron female union with 24° conical sealing face and taper thread acc. to DIN 2999.

Materials	Malleable cast iron

DN	6	8	10	12	16	20	25	32	40	50
PN* [bar]	25	25	25	25	25	25	25	25	25	25
d_1	Rp 1/4	Rp 1/4	Rp 3/8	Rp 1/2	Rp 1/2	Rp 3/4	Rp 1	Rp 1 1/4	Rp 1 1/2	Rp 2
L_1 [mm]	10	10	10	13	13	15	17	19	19	24
SW_1 [mm]	18	18	22	26	26	31	38	48	54	66
SW_2 [mm]	28	28	32	39	39	48	54	67	73	90
SW_3 [mm]	15	15	19	24	24	31	38	48	54	66
L [mm]	55	55	58	66	66	72	80	90	95	106
L_a [mm]	72	72	75	86	86	92	100	115	120	131
Weight [kg] ± 10%	0.094	0.094	0.126	0.193	0.193	0.313	0.432	0.748	0.870	1.295

Connection type:
soldered up to 300°C, welded up to 600°
Please specify type, nominal diameter, material, working temperature and pressure in your order.

*See coupling calculations

Standard sizes

TYPE UC
KE-MASTERHOSE®

350

Materials	Malleable cast iron

DN	12	16	20	25	32	40	50
PN* [bar]	25	25	25	25	25	25	-
d_1	R 1/2	R 1/2	R 3/4	R 1	R 1 1/4	R 1 1/2	-
L_1 [mm]	13	13	15	17	19	19	-
SW_1 [mm]	26	26	32	38	48	54	-
SW_2 [mm]	39	39	48	55	67	74	-
SW_3 [mm]	25	25	32	39	48	54	-
L [mm]	85	85	92	103	114	120	-
L_a [mm]	105	105	112	123	139	145	-
Weight [kg] ± 10%	0.217	0.217	0.335	0.472	0.820	0.980	-

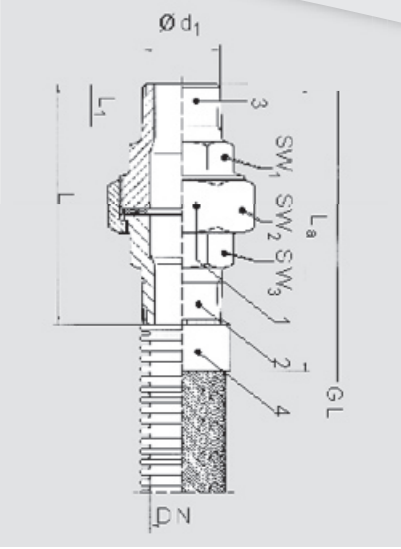

Female union with 24° conical sealing face and parallel thread acc. to DIN 2999.

355

Materials	Malleable cast iron

DN	6	8	10	12	16	20	25	32	40	50
PN* [bar]	25	25	25	25	25	25	25	25	25	25
d_1	Rp 1/4	Rp 1/4	Rp 3/8	Rp 1/2	Rp 1/2	Rp 3/4	Rp 1	Rp 1 1/4	Rp 1 1/2	Rp 2
L_1 [mm]	10	10	10	13	13	15	17	19	19	24
SW_1 [mm]	19	19	22	26	26	31	38	48	54	66
SW_2 [mm]	28	28	32	39	39	48	54	67	73	90
SW_3 [mm]	15	15	19	24	24	31	38	48	54	66
L [mm]	55	55	58	66	66	72	80	90	95	106
L_a [mm]	72	72	75	86	86	92	100	115	120	131
Weight [kg] ± 10%	0.090	0.090	0.118	0.188	0.188	0.305	0.398	0.700	0.860	0.1250

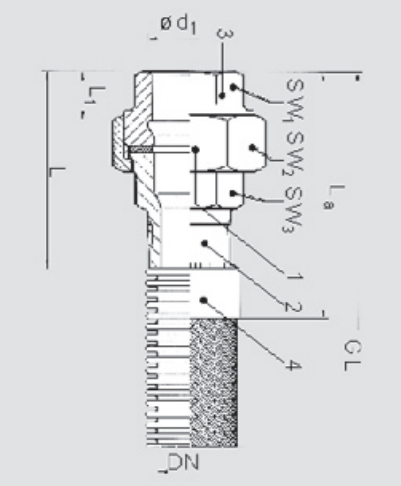

Cast-iron female union with flat sealing face and inner thread acc. to DIN 2999 (BSPT).

Connection type:
soldered up to 300°C, welded up to 600°
Please specify type, nominal diameter, material, working temperature and pressure in your order.

*See coupling calculations

TYPE UC
KE-MASTERHOSE®

360

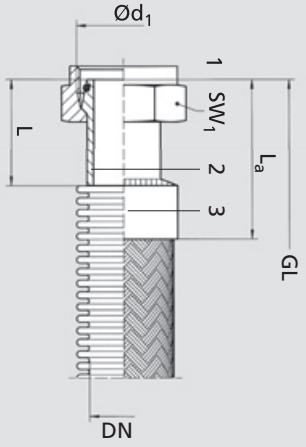

Union with 24° conical sealing face and O-ring acc. to DIN 3870-S.

Materials	(St37.2) (1.0038, AISI A 570 Gr. 36)
	-
	(1.4571) AISI 316Ti

*Other materials upon request; different coupling material variants are possible

DN DN	6	8	10	12	16	20	25	32
PN* [bar]	630	630	630	400	400	400	250	250
d_1	M 18x1.5	M 20x1.5	M 22x1.5	M 34x1.5	M 30x2.0	M 36x2.0	M 42x2.0	M 52x2.0
SW_1 [mm]	22	24	27	3,0	36	46	50	60
L [mm]	32	32	38	39	45	51	55	61
L_a [mm]	49	49	55	59	65	71	75	86
Weight [kg] ± 10%	0.037	0.045	0.065	0.087	0.127	0.233	0.281	0.397

365

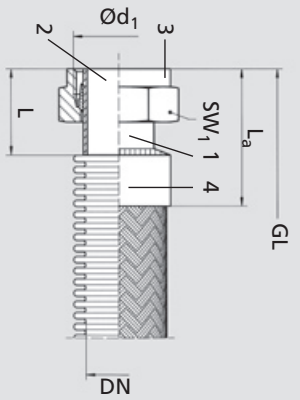

Union acc. to DIN 3870 - light version.

Materials	(St37.2) (1.0038, AISI A 570 Gr. 36)
	-
	(1.4571) AISI 316Ti

*Other materials upon request, NPT thread version available on request

DN	6	8	10	12	16	20	25	32	40
PN* [bar]	250	250	250	250	160	160	100	100	100
d_1	M 14x1.5	M 16x1.5	M 18x1.5	M 22x1.5	M 26x1.5	M 30x2.0	M 36x2.0	M 45x2.0	M 52x2.0
SW_1 [mm]	17	19	22	27	32	36	41	50	60
L [mm]	35	35	35	40	40	40	50	50	66
L_a [mm]	52	52	52	60	60	60	70	75	91
Weight [kg] ± 10%	0.022	0.031	0.037	0.064	0.089	0.116	0.142	0.228	0.361

Connection type:
soldered up to 300°C, welded up to 600°
Please specify type, nominal diameter, material, working temperature and pressure in your order.

*See coupling calculations

Standard sizes

TYPE UC
KE-MASTERHOSE®

370

Materials	Brass
	(St37.2) (1.0038, AISI A 570 Gr. 36)
	(1.4571) AISI 316Ti

*Other materials upon request; different coupling material variants are possible

DN	6	8	10	12	16	20	25	32	40
PN* [bar]	6	6	6	6	6	6	6	6	6
d_1	M 14x1.5	M 16x1.5	M 18x1.5	M 22x1.5	M 26x1.5	M 30x1.5	M 38x1.5	M 45x1.5	M 52x1.5
SW_1 [mm]	17	19	22	27	32	36	46	50	60
L_1 [mm]	24	24	24	29	29	29	31	31	31
L_a [mm]	41	41	41	49	49	49	51	56	56
Weight [kg] ± 10%	0.016	0.029	0.038	0.063	0.085	0.109	0.149	0.213	0.306

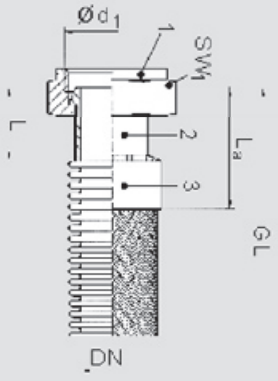

Union with spherical sealing and metric thread acc. to DIN 3870LL.

375

Materials	Sealing part	Nut
	-	Steel
	(St37.2) (1.0038, AISI A 570 Gr. 36)	
	(1.4571) AISI 316Ti	

*Other materials upon request; different coupling material variants are possible

DN	6	8	10	16	20	25	32	40
PN* [bar]	6	6	6	6	6	6	6	6
d_1	G 1/4	G 3/8	G 1/2	G 3/4	G 1	G 1 1/4	G 1 1/2	G 2
SW_1 [mm]	19	24	27	32	41	50	55	70
L [mm]	34	37	45	53	56	59	63	74
L_1 [mm]	10	11	13	17	19	20	21	25
L_a [mm]	51	54	62	73	76	79	88	99
Weight [kg] ± 10%	0.023	0.026	0.037	0.080	0.104	0.129	0.203	0.306

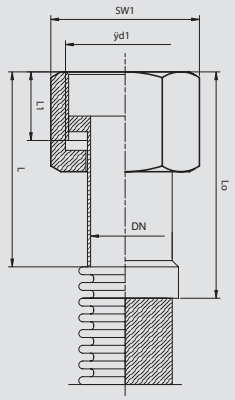

Socket with flat bearing area and cap nut according to DIN 3870LL.

Connection type:
soldered up to 300°C, welded up to 600°
Please specify type, nominal diameter, material, working temperature and pressure in your order.

*See coupling calculations

Standard sizes

TYPE UC
KE-MASTERHOSE®

380

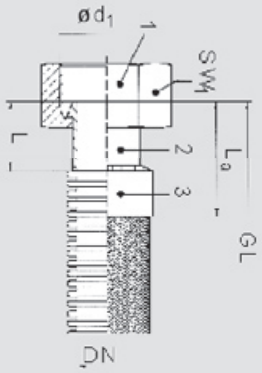

Union with spherical sealing and unified screw thread acc. to ISO 10806.

Materials	Sealing part	Nut
	-	Brass
	(St37.2) (1.0038, AISI A 570 Gr. 36)	
	(1.4571) AISI 316Ti	

*Other materials upon request; different coupling material variants are possible

DN	6	8	10	12	16	20	25	32	40
PN* [bar]	6	6	6	6	6	6	6	6	6
d_1	G 1/4	G 3/8	G 1/2	G 5/8	G 3/4	G 1	G 1 1/4	G1 1/2	G 1 3/4
SW_1 [mm]	17	22	27	27	32	41	50	55	65
L_1 [mm]	24	24	24	29	29	29	31	31	31
L_a [mm]	41	41	41	49	49	49	51	56	56
Weight [kg] ± 10%	0.030	0.040	0.070	0.080	0.100	0.150	0.280	0.290	0.470

385

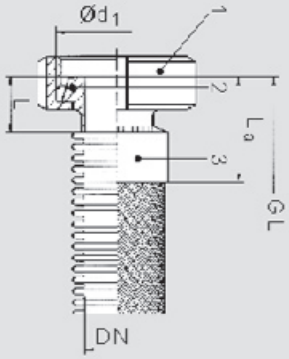

Tapered socket with proved union nut to DIN 11851.

Materials	(1.4301) AISI 304
	(1.4571) AISI 316 L

*Other materials upon request

DN	10	16	20	25	32	40	50	65	80
PN* [bar]	40	40	40	40	40	40	25	25	25
d_1	Rd 28x1/8	Rd 34x1/8	Rd 44x1/6	Rd 52x1/6	Rd 58x1/6	Rd 65x1/6	Rd 78x1/6	Rd 95x1/6	Rd 110x1/4
L [mm]	17	17	18	22	25	26	28	32	37
L_a [mm]	34	37	38	42	50	51	53	57	67
Weight [kg] ± 10%	0.090	0.110	0.184	0.258	0.327	0.403	0.524	0.820	1.140

Connection type:
soldered up to 300°C, welded up to 600°
Please specify type, nominal diameter, material, working temperature and pressure in your order.

*See coupling calculations

Standard sizes

390

Materials	(1.4301) AISI 304
	(1.4571) AISI 316 L

*Other materials upon request

DN	10	16	20	25	32	40	50	65	80
PN* [bar]	40	40	40	40	40	40	25	25	25
d_1	Rd 28x1/8	Rd 34x1/8	Rd 44x1/6	Rd 52x1/6	Rd 58x1/6	Rd 65x1/6	Rd 78x1/6	Rd 95x1/6	Rd 110x1/4
L [mm]	21	21	24	29	32	33	35	40	45
L_a [mm]	38	41	44	49	57	58	60	65	75
Weight [kg] ± 10%	0.044	0.053	0.108	0.141	0.174	0.183	0.288	0.420	0.590

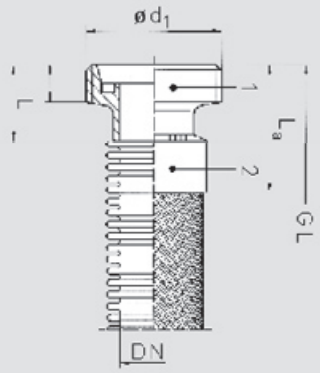

Threaded socket with male thread to DIN 11851.

Connection type:
soldered up to 300°C, welded up to 600°
Please specify type, nominal diameter, material, working temperature and pressure in your order.

*See coupling calculations

TYPE CC
KE-MASTERHOSE®

400

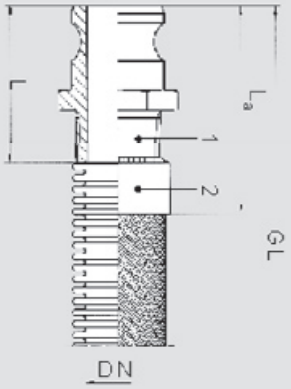

Camlock acc. to DIN 2828 – quick coupler male part (military standard MS 27019).

Materials	Brass
	1.4404 (AISI 316L)
	1.4571 (AISI 316 Ti)

*Other materials upon request

DN	20	25	32	40	50	65	80	100
PN* [bar]	10	10	10	10	10	10	10	10
L [mm]	51.5	62.5	77	78.5	88.5	99.5	104	117.5
L_a [mm]	71.5	82.5	102	103.5	113.5	124.5	134	147.5
Weight [kg] ± 10%	0.17	0.25	0.43	0.53	0.77	1.10	1.40	2.00

405

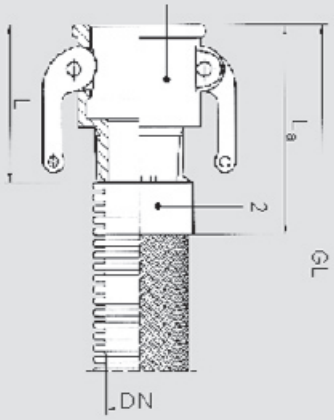

Camlock acc. to DIN 2828 – quick coupler female part (military standard MS 27019).

Materials	Brass
	1.4404 (AISI 316L)
	1.4571 (AISI 316 Ti)

*Other materials upon request; different coupling material variants are possible

DN DN	20	25	32	40	50	65	80	100
PN* [bar]	10	10	10	10	10	10	10	10
L [mm]	51	60	69	71	81	88.5	93	102.5
L_a [mm]	71	80	94	96	106	113.5	123	132.5
Weight [kg] ± 10%	0.23	0.35	0.60	0.67	0.90	1.40	1.55	2.55

www.danline.dk

masterhose

KE-Masterhose

Your local representative:

KE-BURGMANN

KE-BURGMANN A/S
Expansion Joints Division
Park Allé 34
DK-6600 Vejen, Denmark
Tel. +45 75 36 18 11
Fax +45 75 36 15 32
info@ke-burgmann.dk
www.ke-burgmann.com

KE-BURGMANN POLAND Sp. z.o.o
Ul. Techników 40
02-408 Warszawa
Poland
Tel. +48 22 863 12 45
Fax: +48 22 863 12 50
biuro@ke-burgmann.pl